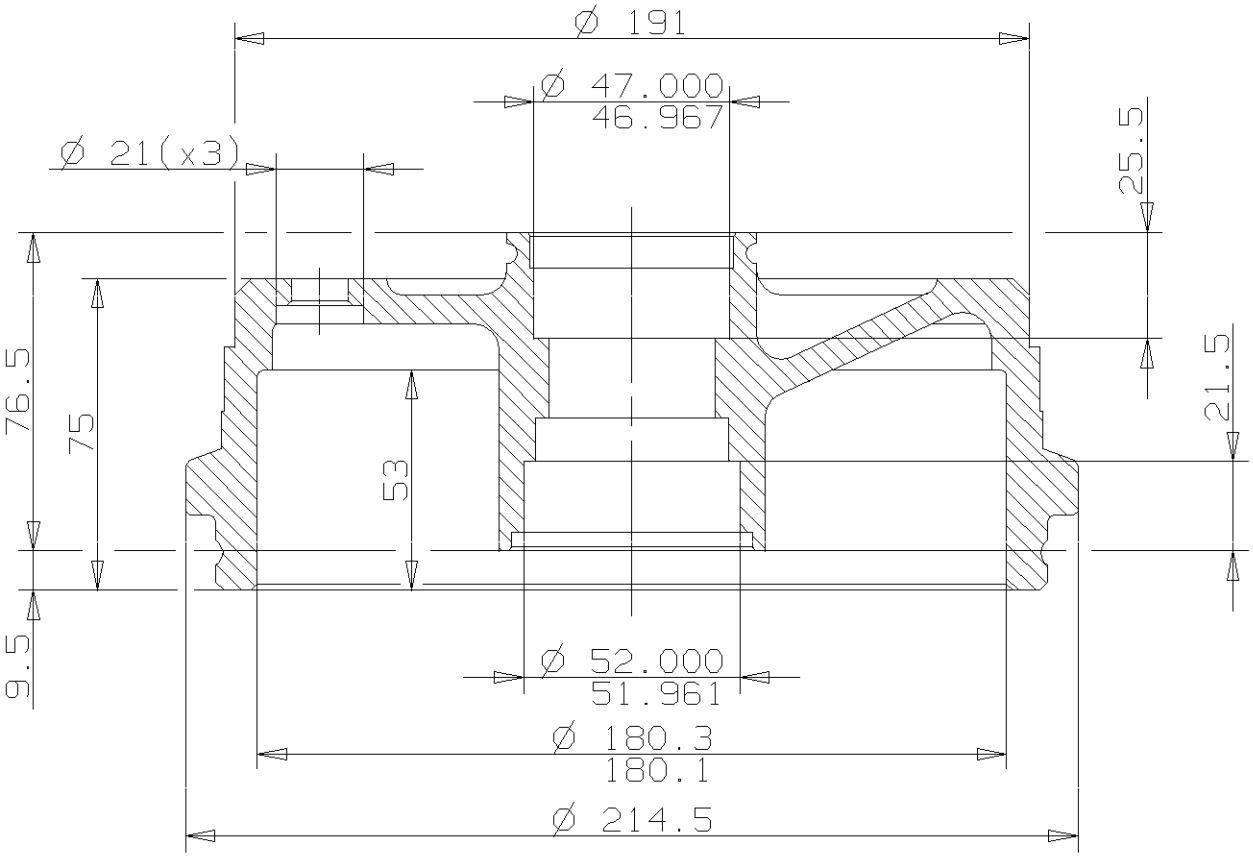

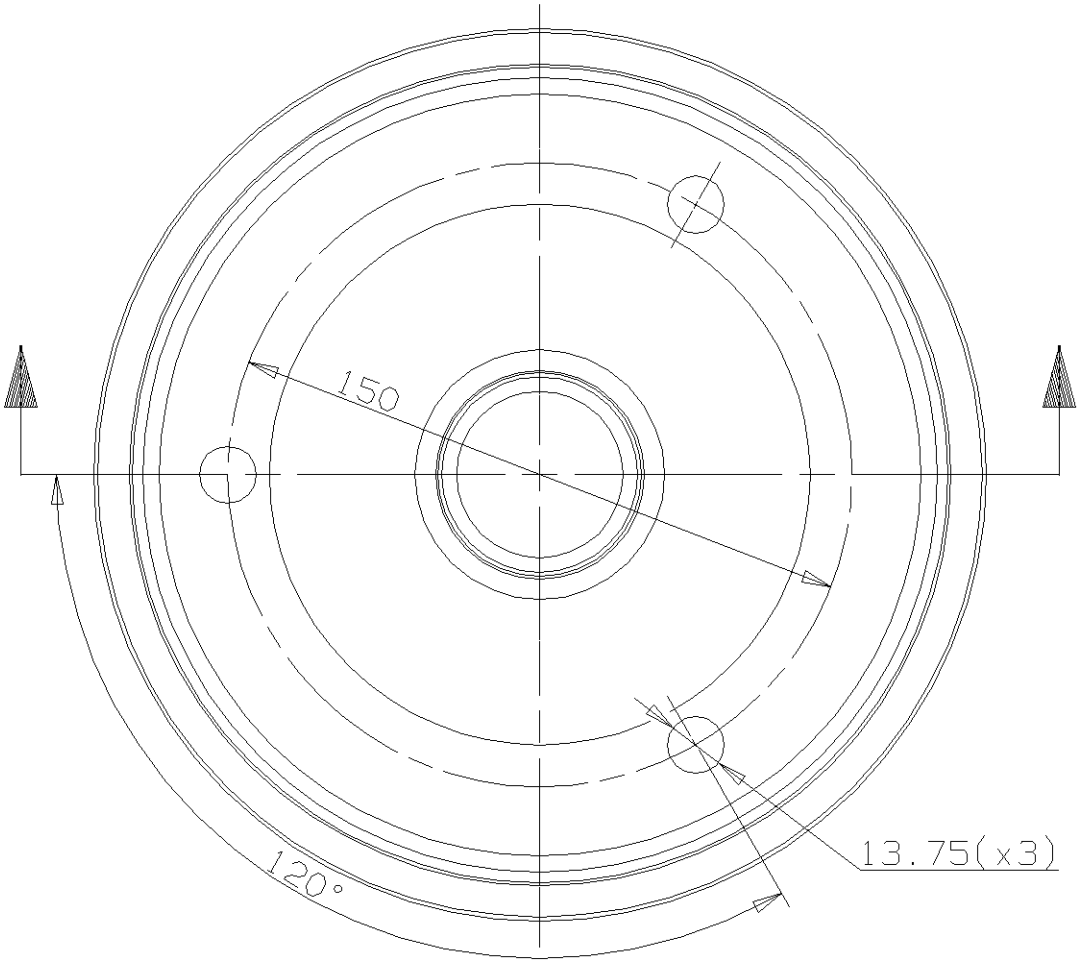

Max.DIA. 181 mm

Weight 5.7 Kg