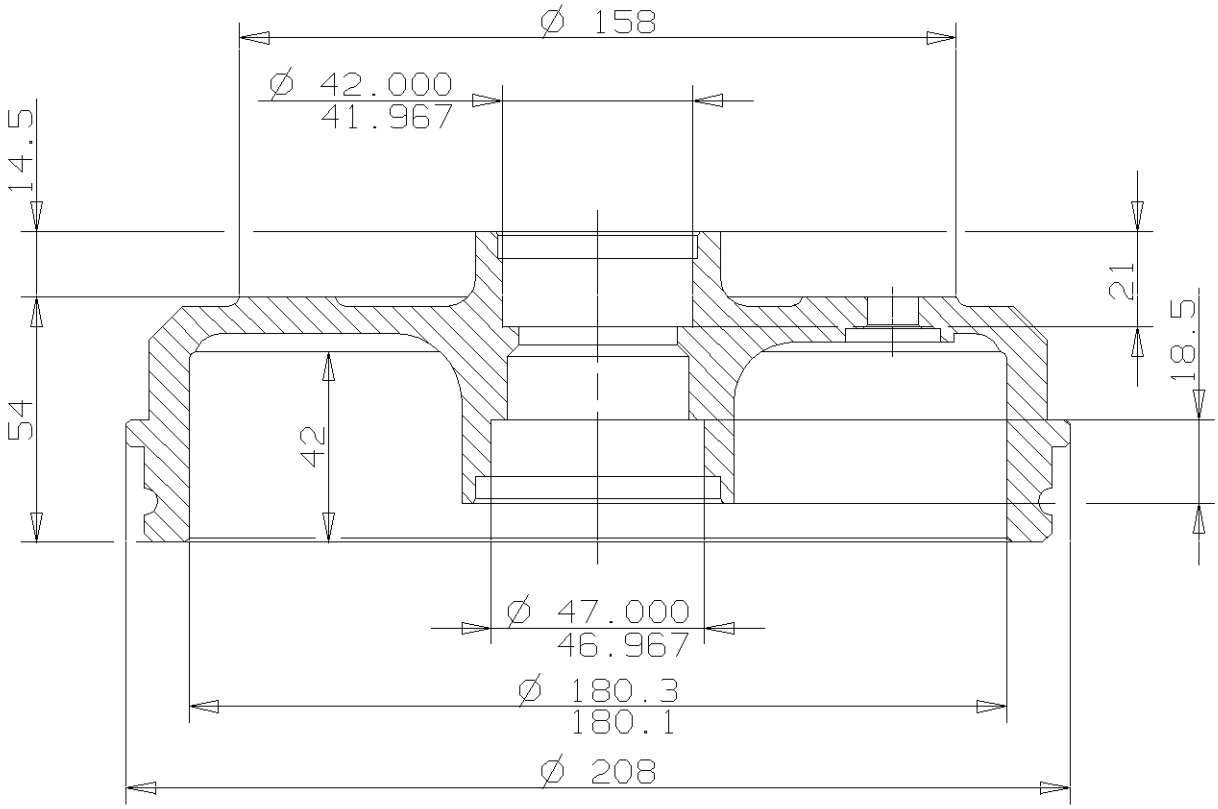

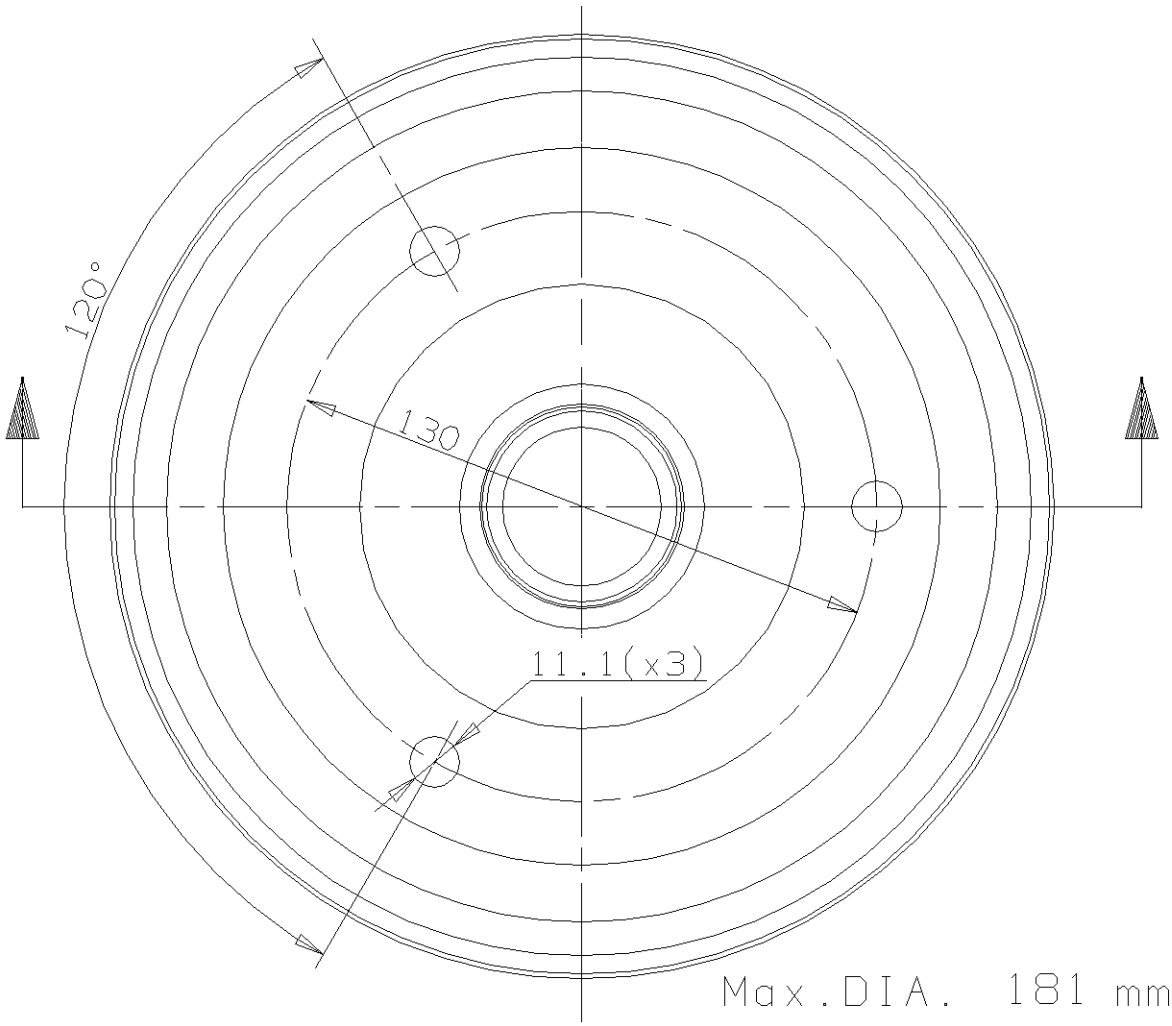

Max.DIA. 181 mm

Weight 3.9 Kg