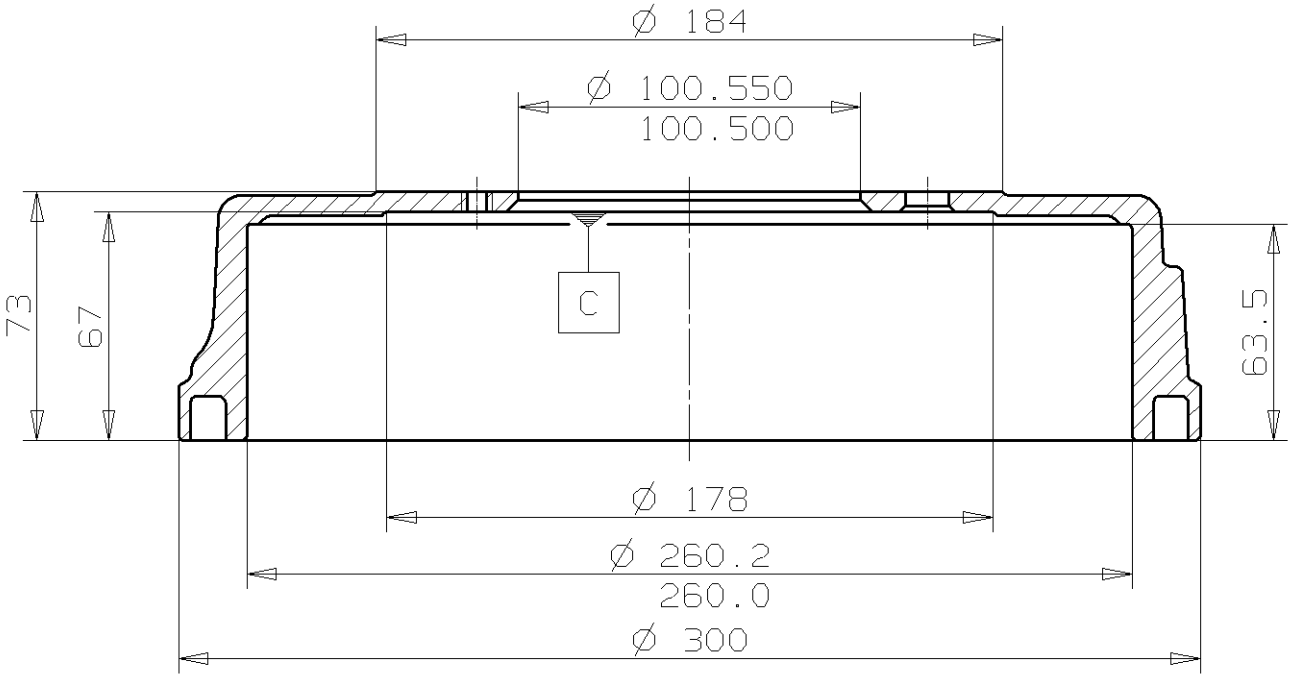

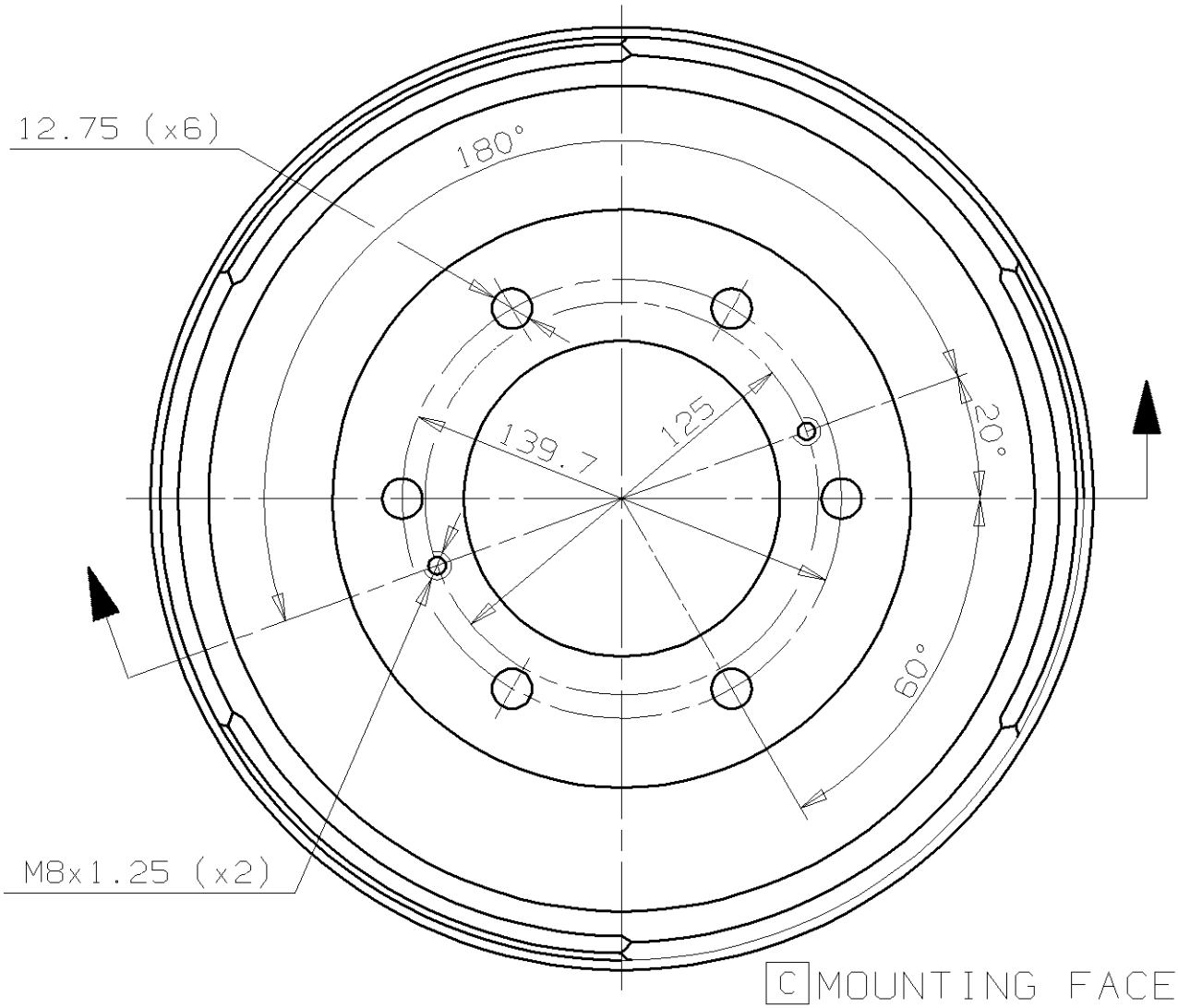

C MOUNTING FACE

Max.DIA. 261.5 mm

Weight 6 Kg