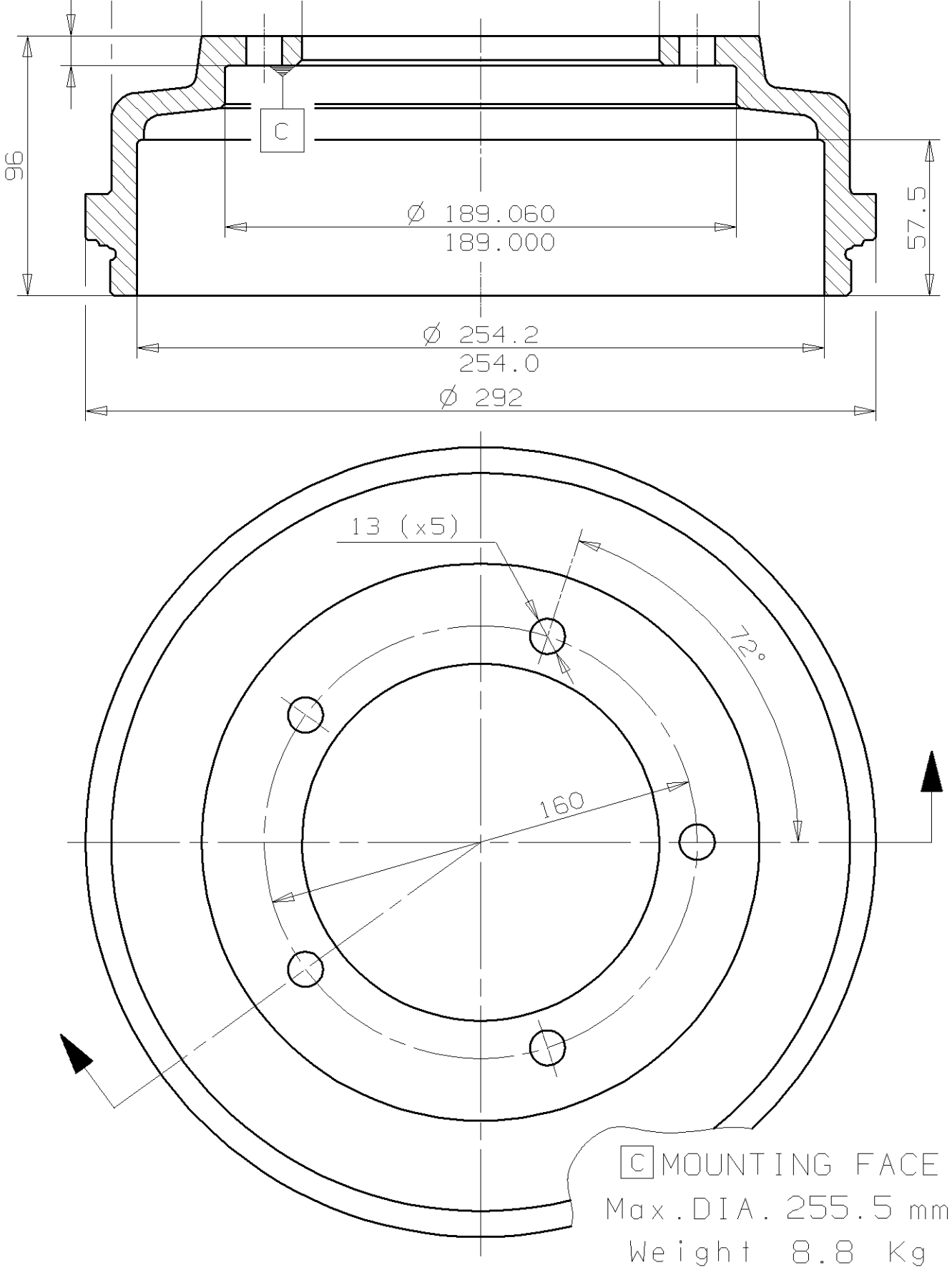
C
96
57.5
Ø 189.060
189.000
Ø 254.2
254.0
Ø 292
13 (x5)
72°
160
C MOUNTING FACE
Max.DIA. 255.5 mm
Weight 8.8 Kg