4PK1022SF (Fiat)

1

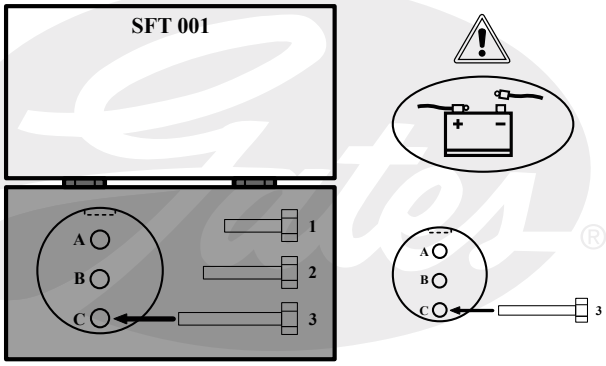

2

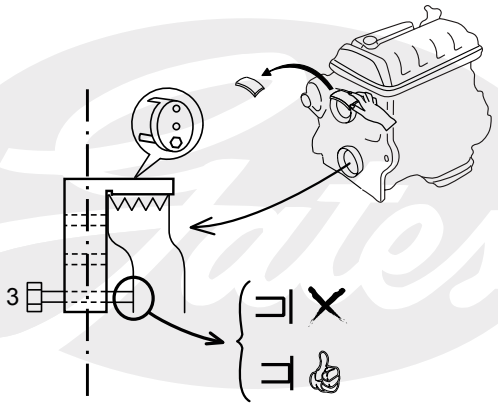

3

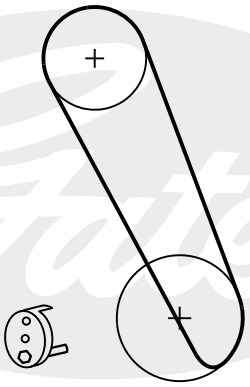

4

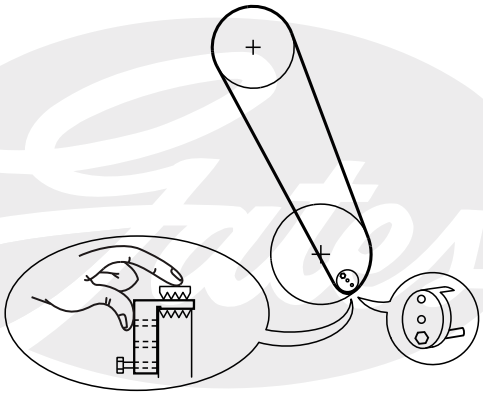

5

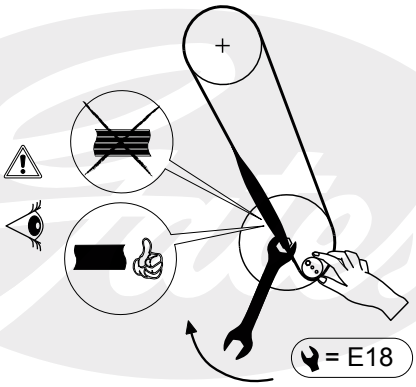

6

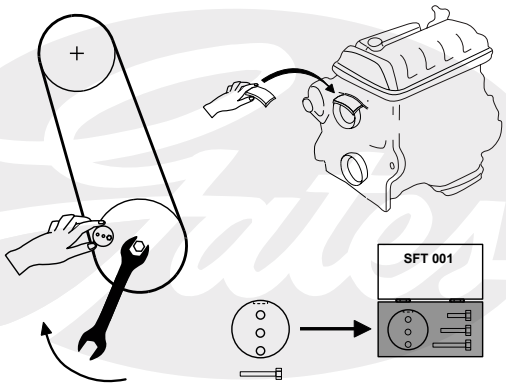

7

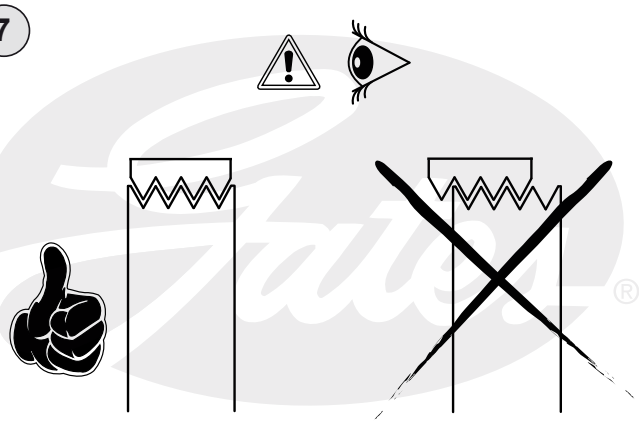

8

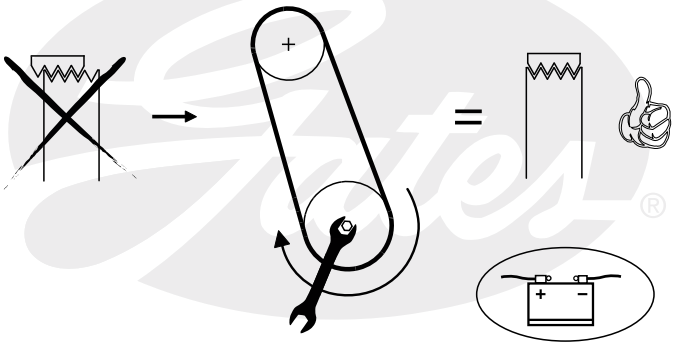

The manufacturers reserve the right to amend details where necessary.

© Gates Corporation 2008

Printed in Belgium - 02/08.