4PK916-890SF (Dacia, Lada, Renault)

REF - 0094-60051

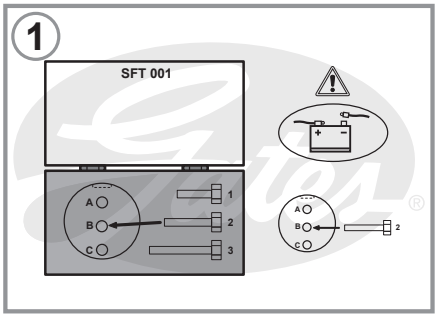

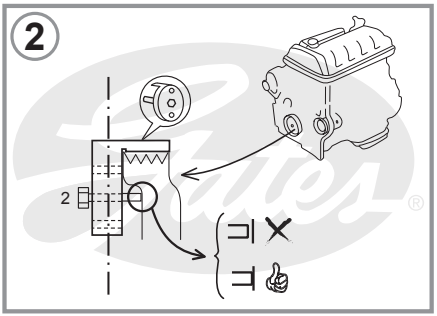

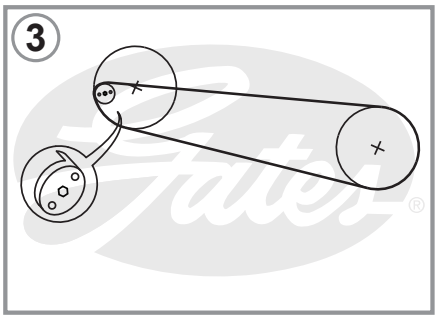

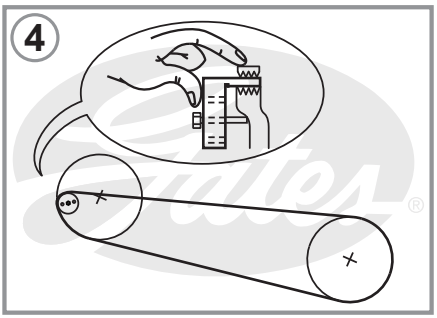

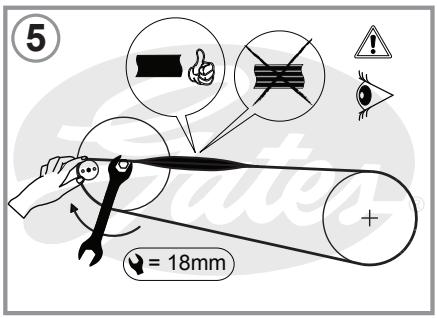

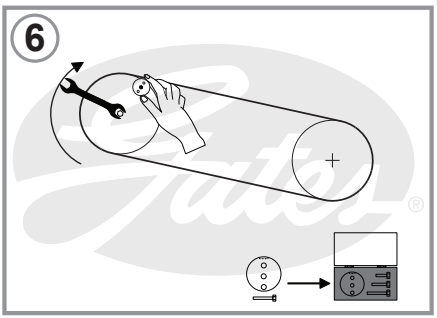

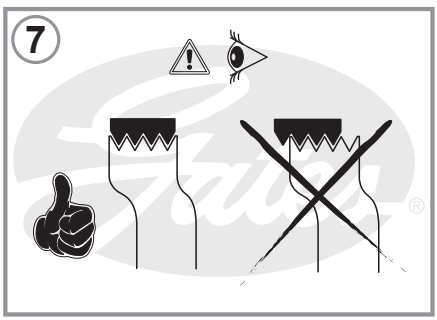

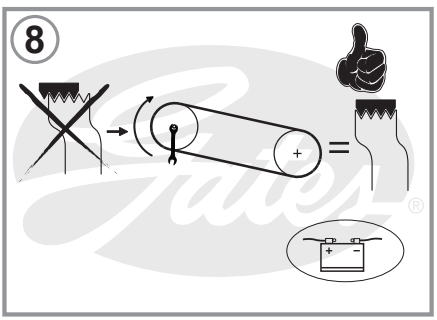

The manufacturers reserve the right to amend details where necessary. © Gates Corporation 2014 Printed in Spain - 07/14.