5PK1236SF (Hyundai)

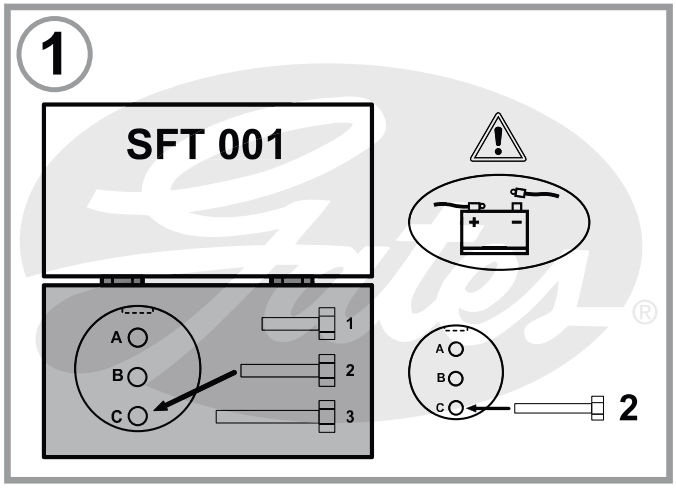

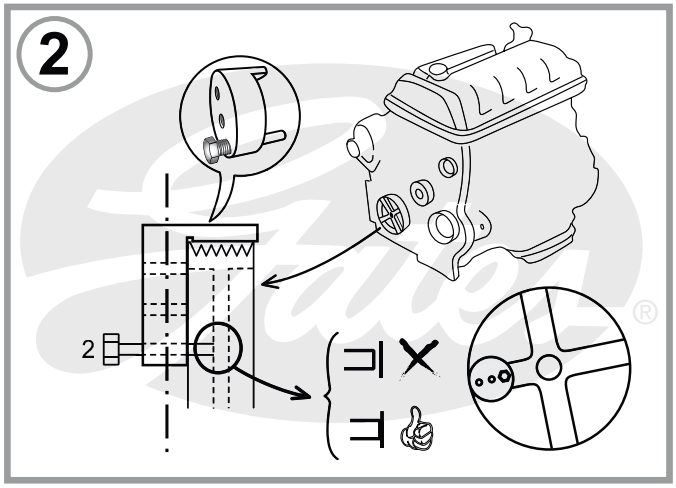

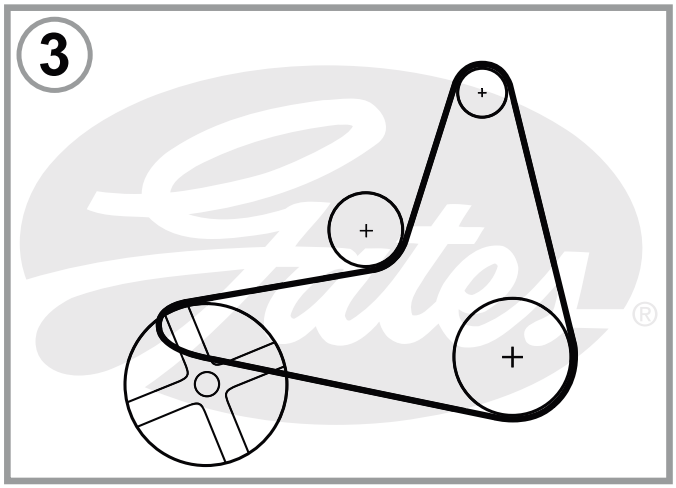

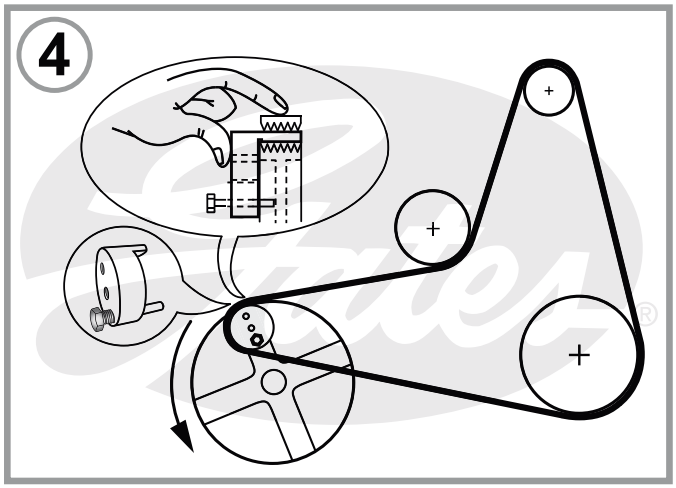

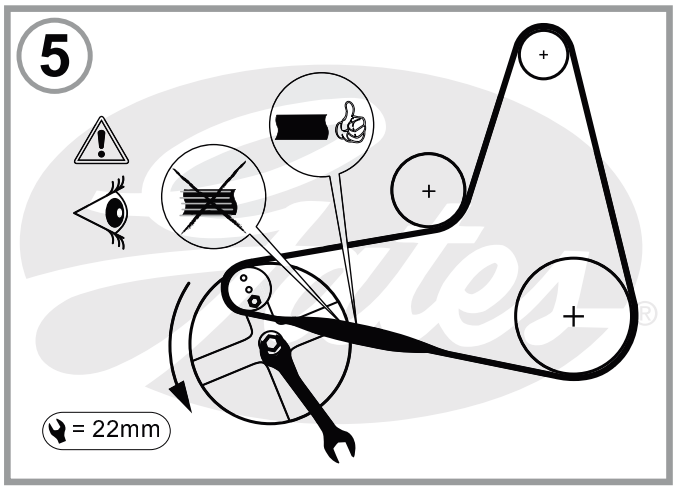

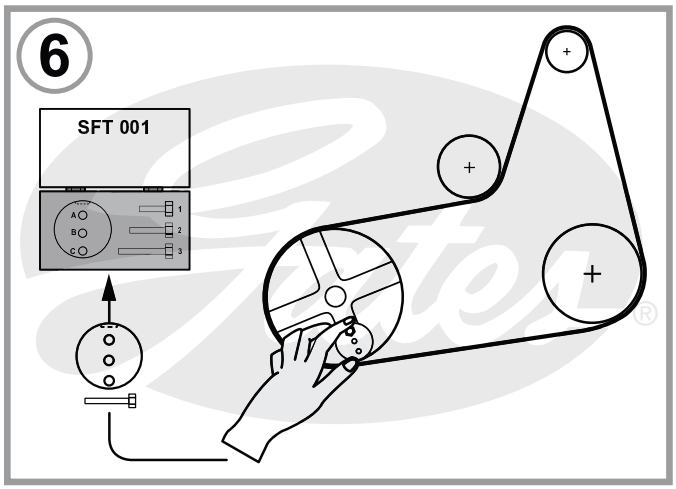

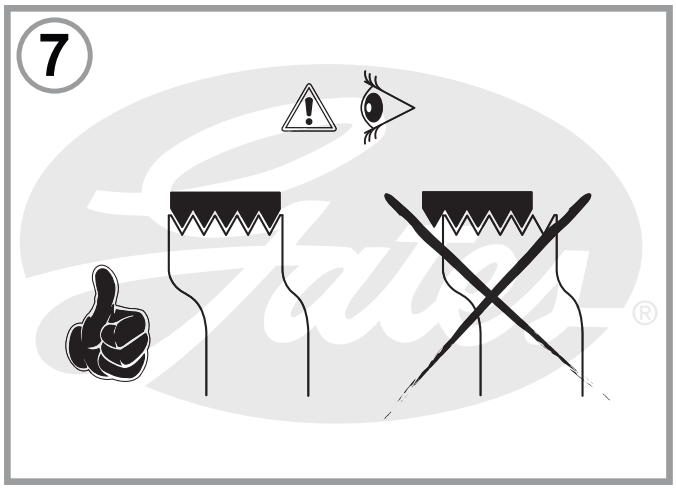

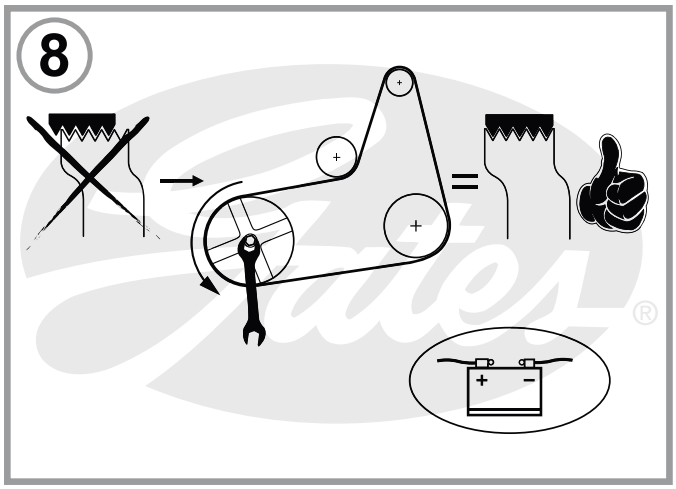

The manufacturers reserve the right to amend details where necessary. © Gates Corporation 2011 Printed in Spain - 05/11.