MONROE

T 0038

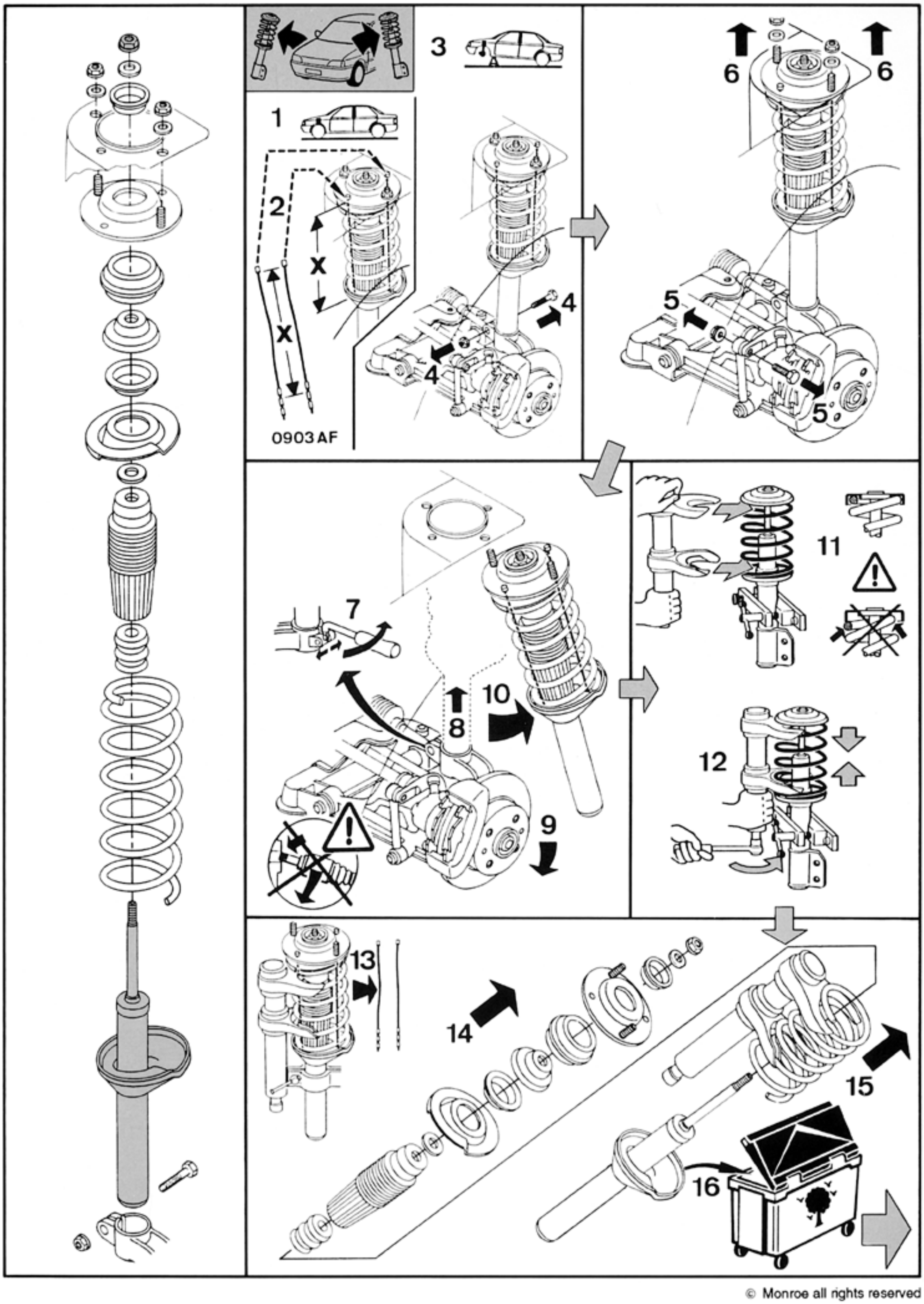

PRINTED IN BELGIUM 07/98

© Monroe all rights reserved