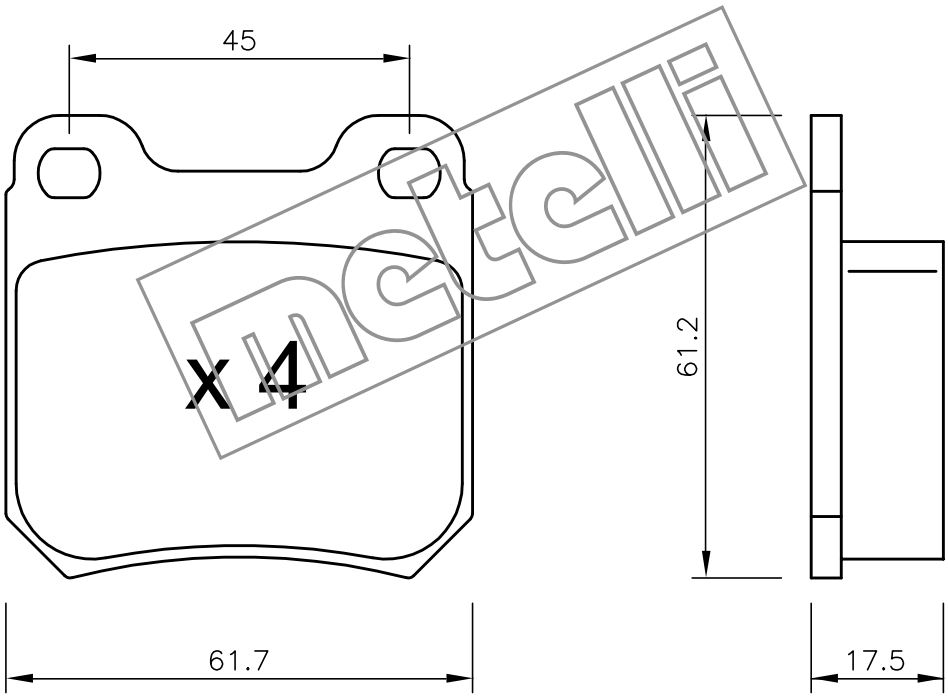
45
x 4
61.2
61.7
17.5