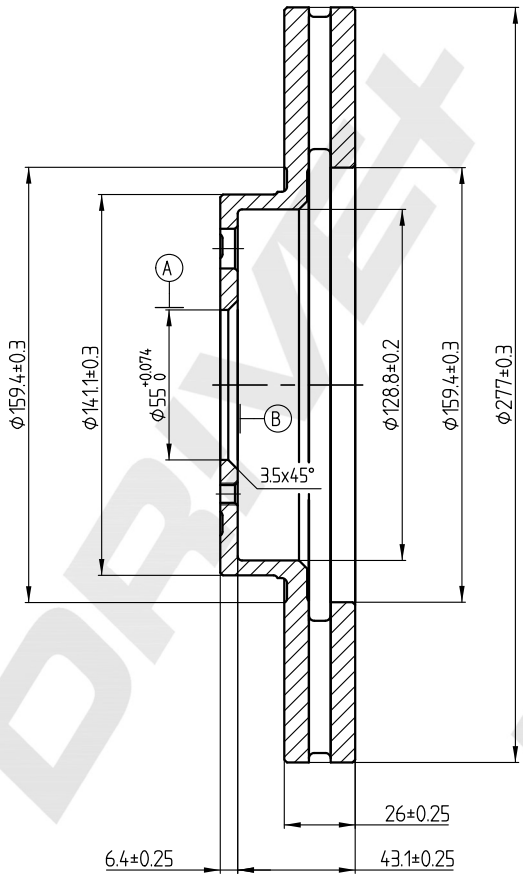

MIN THK 24 MM

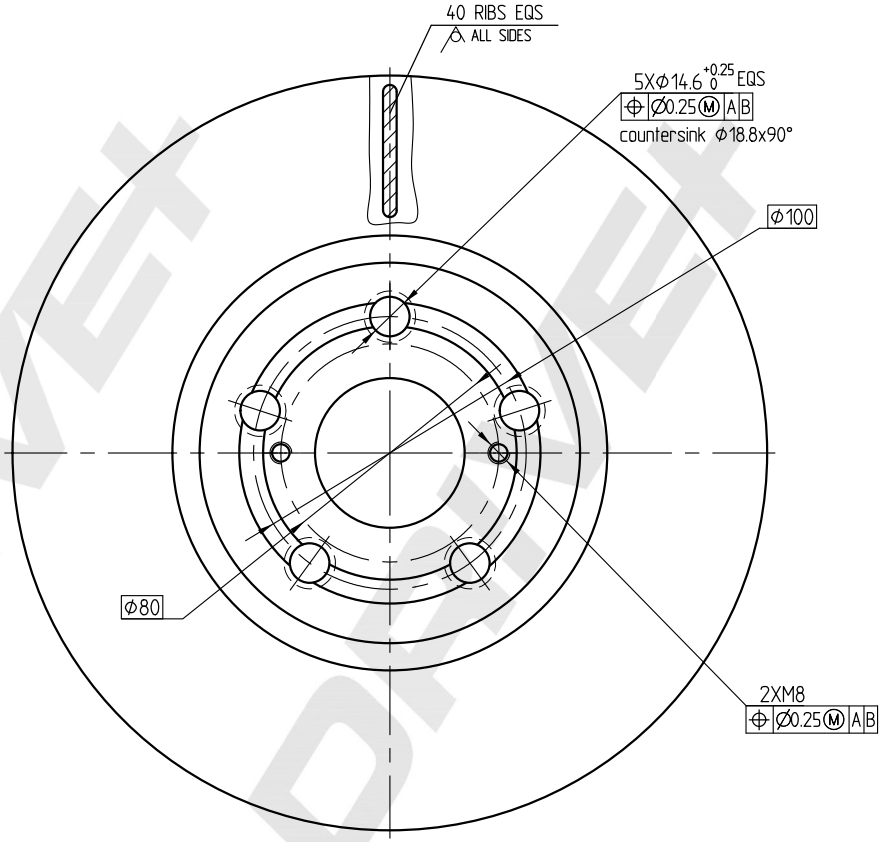

DP Number	Part Number	Drawing Version Number	Drawing Issue Date
DP1010.11.0383	DBD0383	V1	2025.04.13

DRIVE+