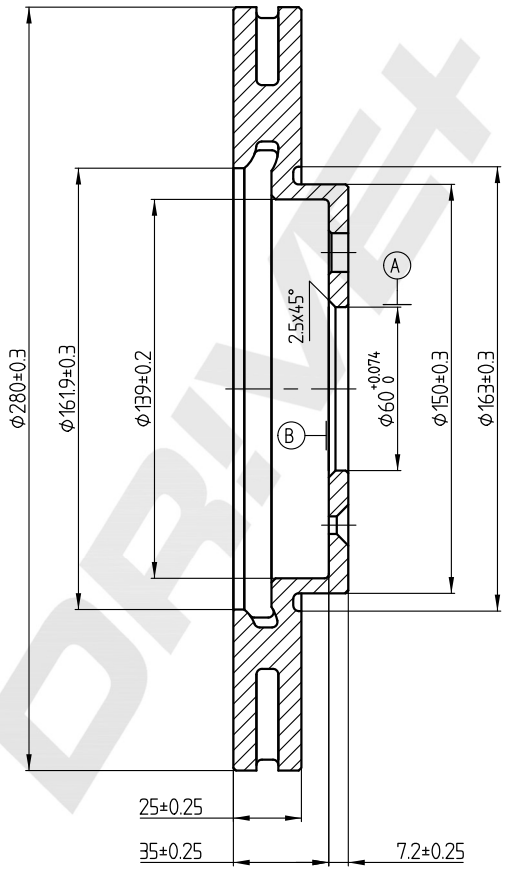

MIN THK 22 MM

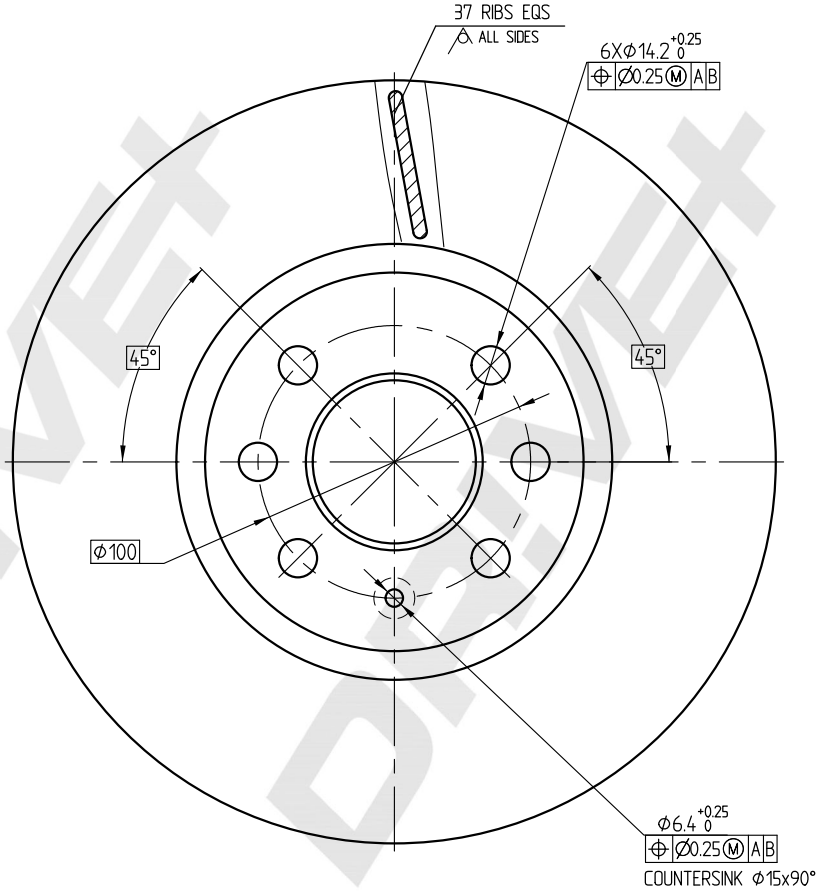

DP Number	Part Number	Drawing Version Number	Drawing Issue Date
DP1010.11.0417	DBD0417	V1	2025.04.13