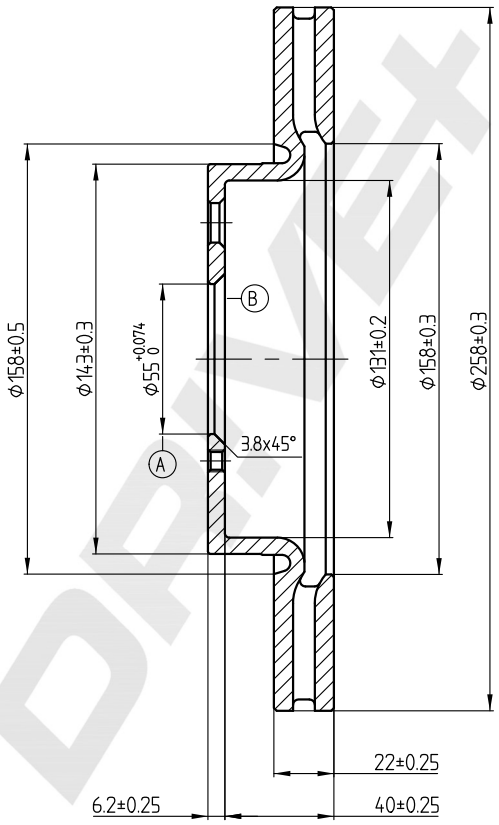

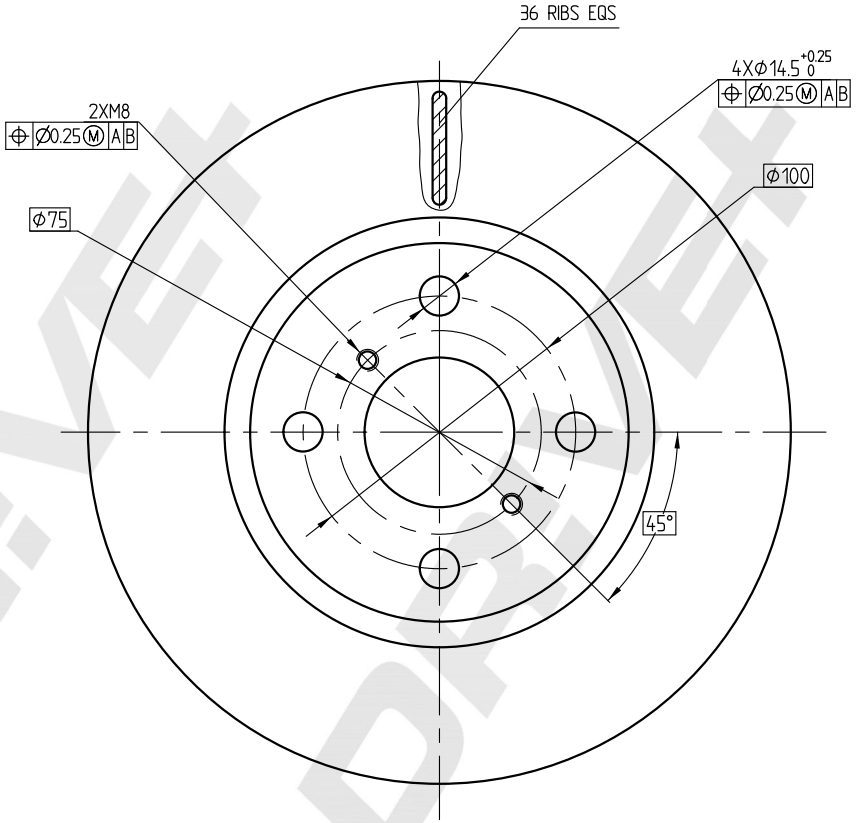

MIN THK 20 MM

DP Number	Part Number	Drawing Version Number	Drawing Issue Date
DP1010.11.0509	DBD0509	V1	2025.04.13

DRIVE+