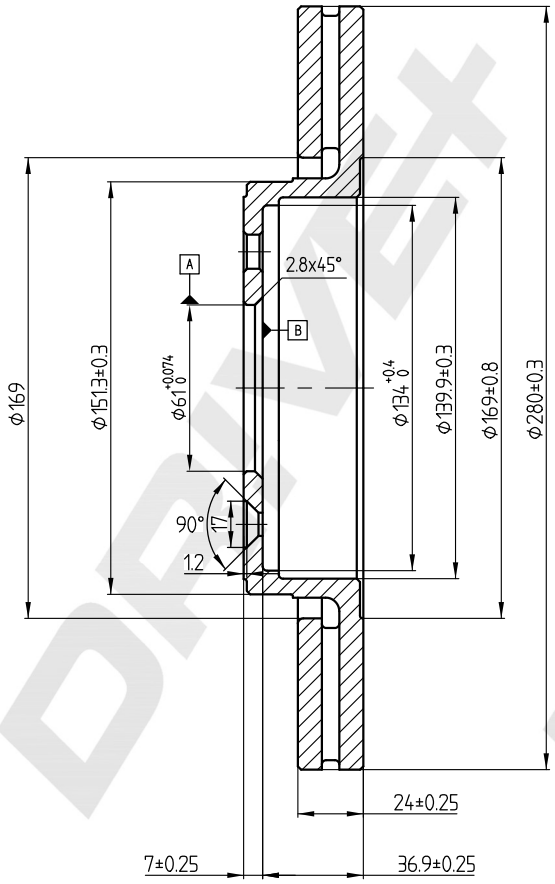

MIN THK 21.8 MM

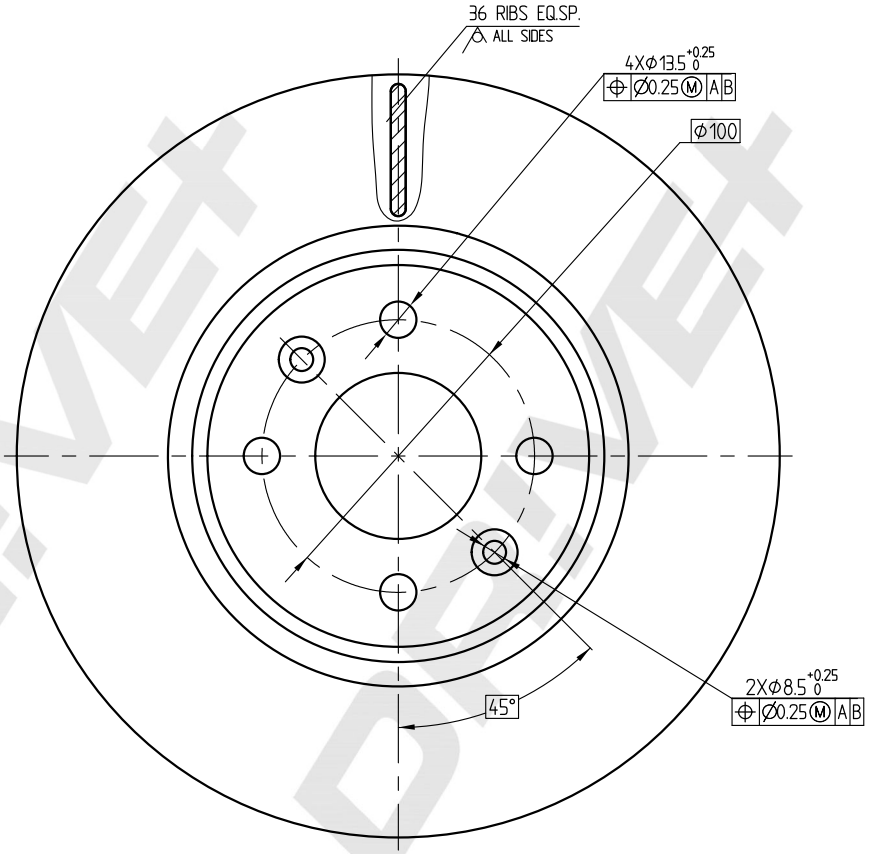

DP Number	Part Number	Drawing Version Number	Drawing Issue Date
DP1010.11.0767	DBD0767	V1	2025.04.13

DRIVE+