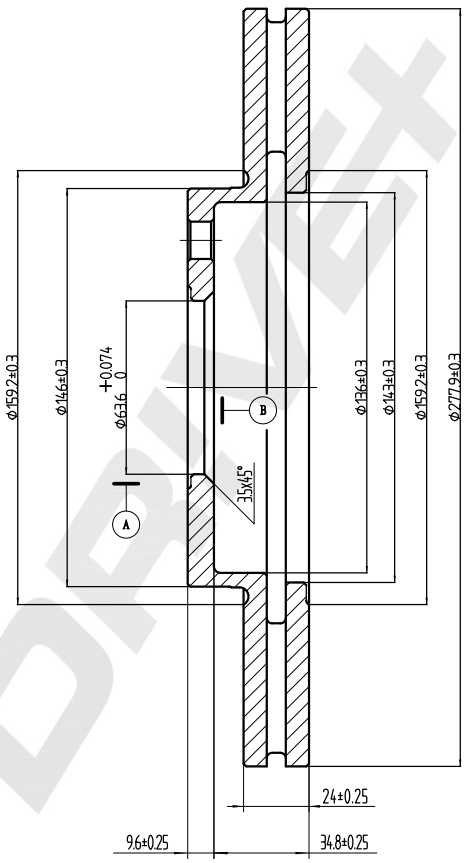

MIN THK 22 MM

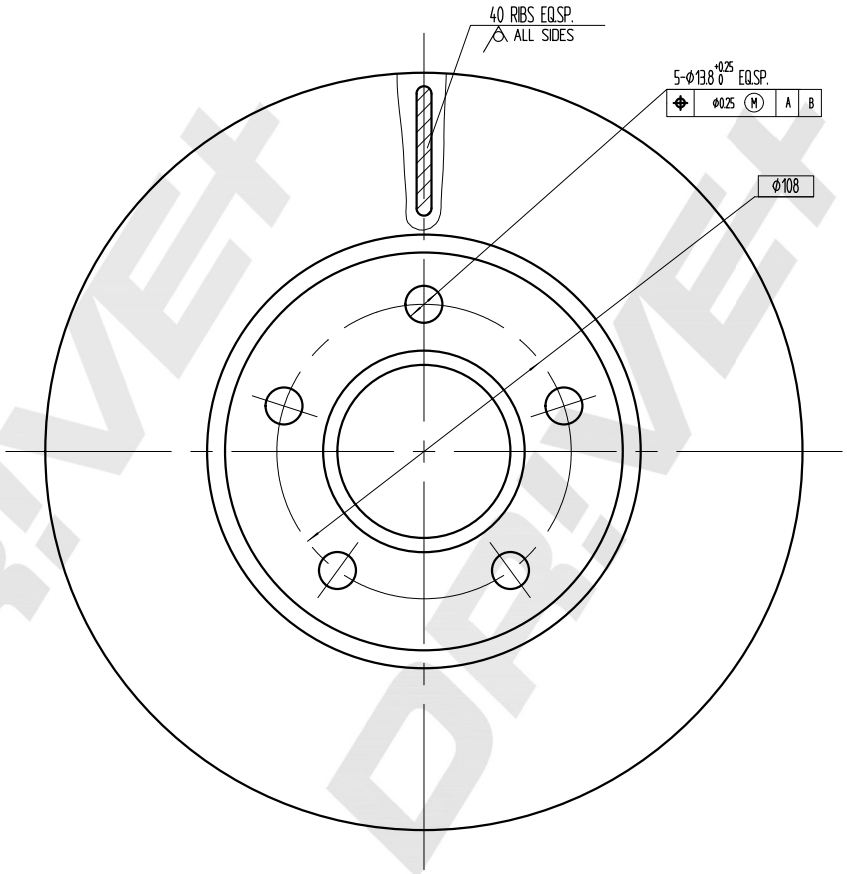

DP Number	Part Number	Drawing Version Number	Drawing Issue Date
DP1010.11.0822	DBD0822	V1	2025.04.13

DRIVE+