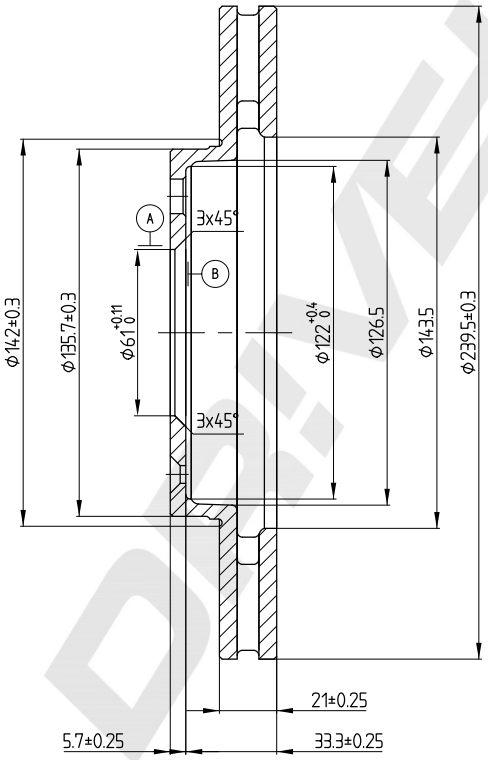

MIN THK 19 MM

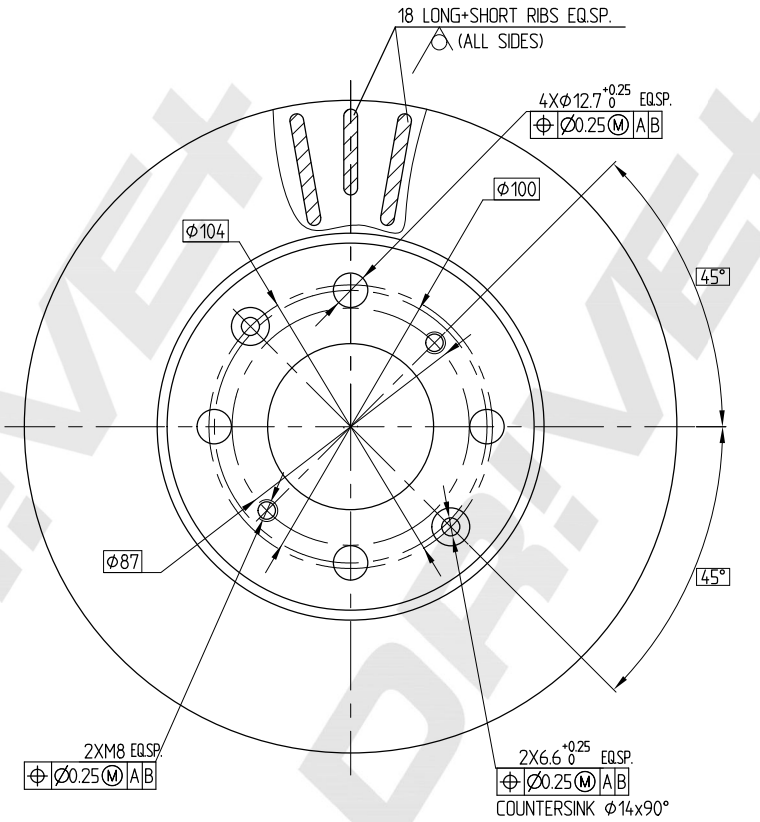

DP Number	Part Number	Drawing Version Number	Drawing Issue Date
DP1010.11.1278	DBD1278	V1	2025.04.13