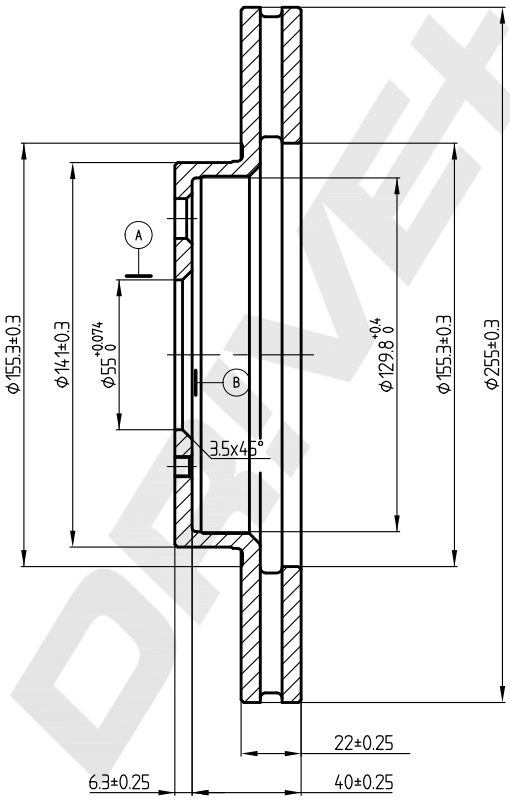


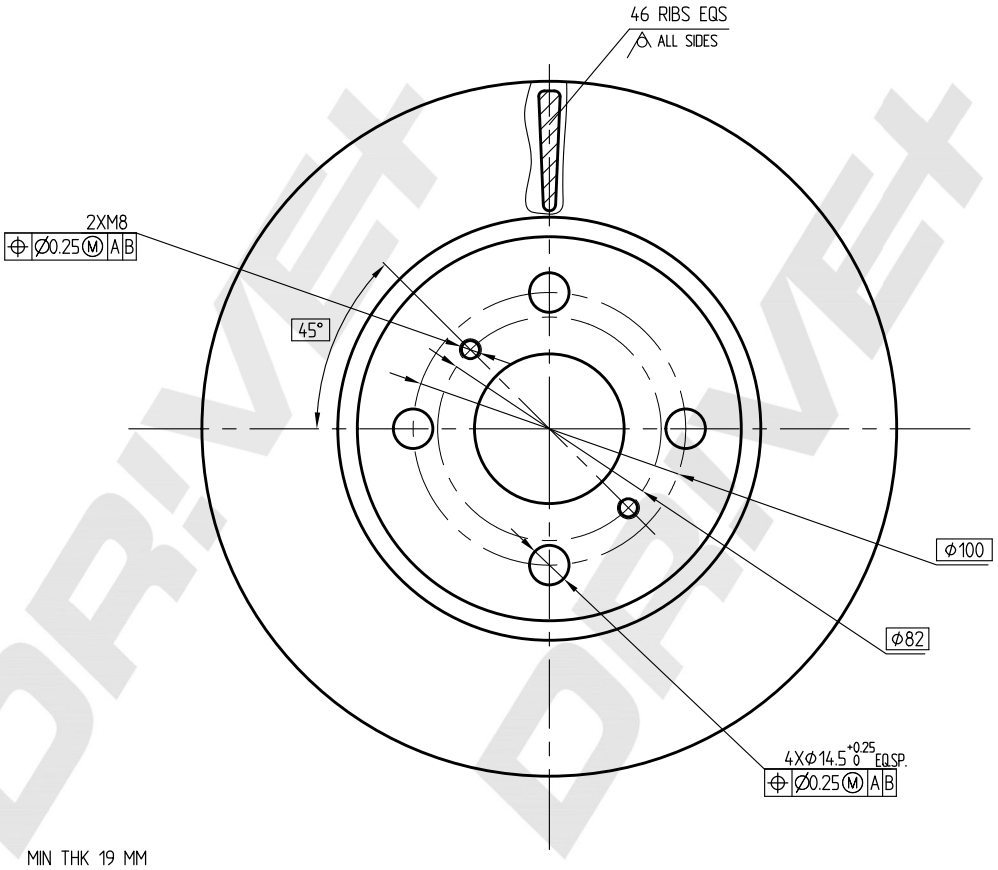


| DP Number | Part Number | Drawing Version Number | Drawing Issue Date |
|---|---|---|---|
| DP1010.11.1366 | DBD1366 | V1 | 2025.04.13 |