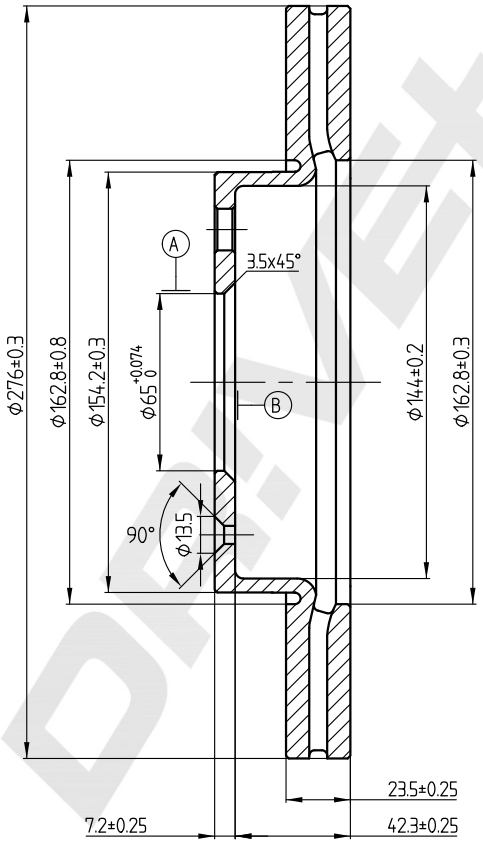

MIN THK 21 MM

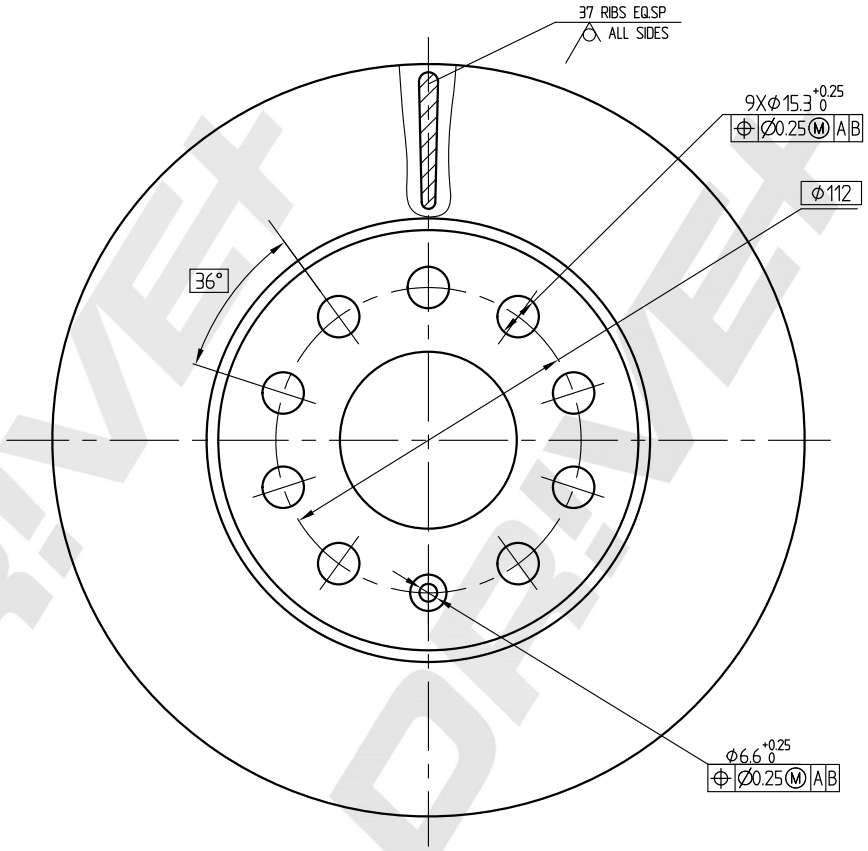

DP Number	Part Number	Drawing Version Number	Drawing Issue Date
DP1010.11.1685	DBD1685	V1	2025.04.19

DRIVE+