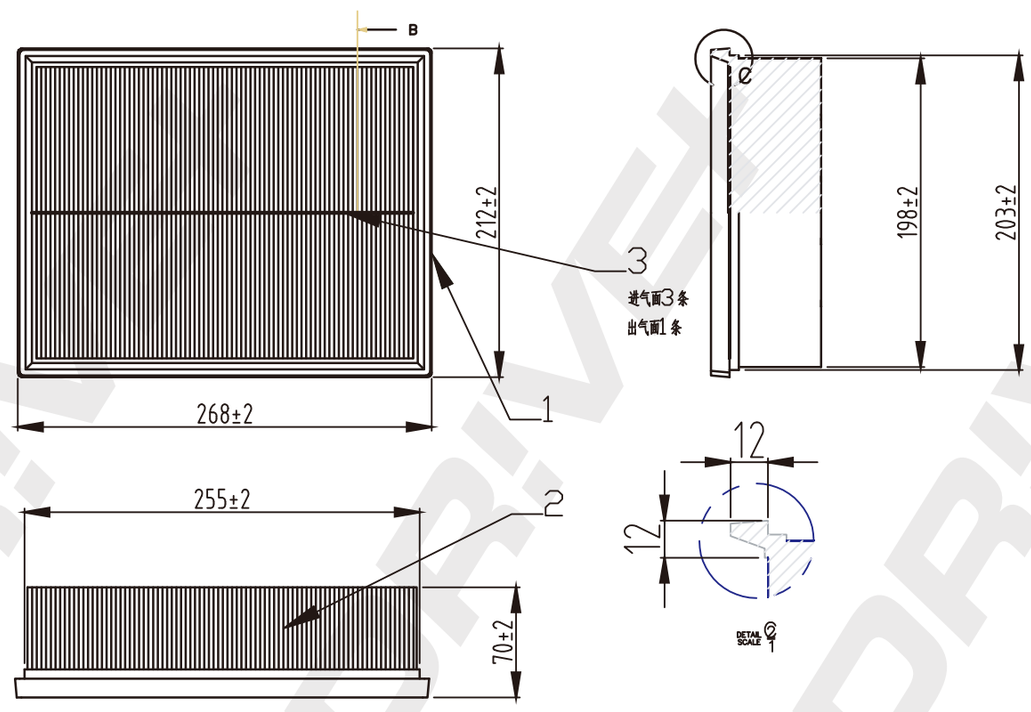

DP Number	Part Number	Drawing Version Number	Drawing Issue Date
DP1110.10.0091	DFA0091	V1	2025.02.27