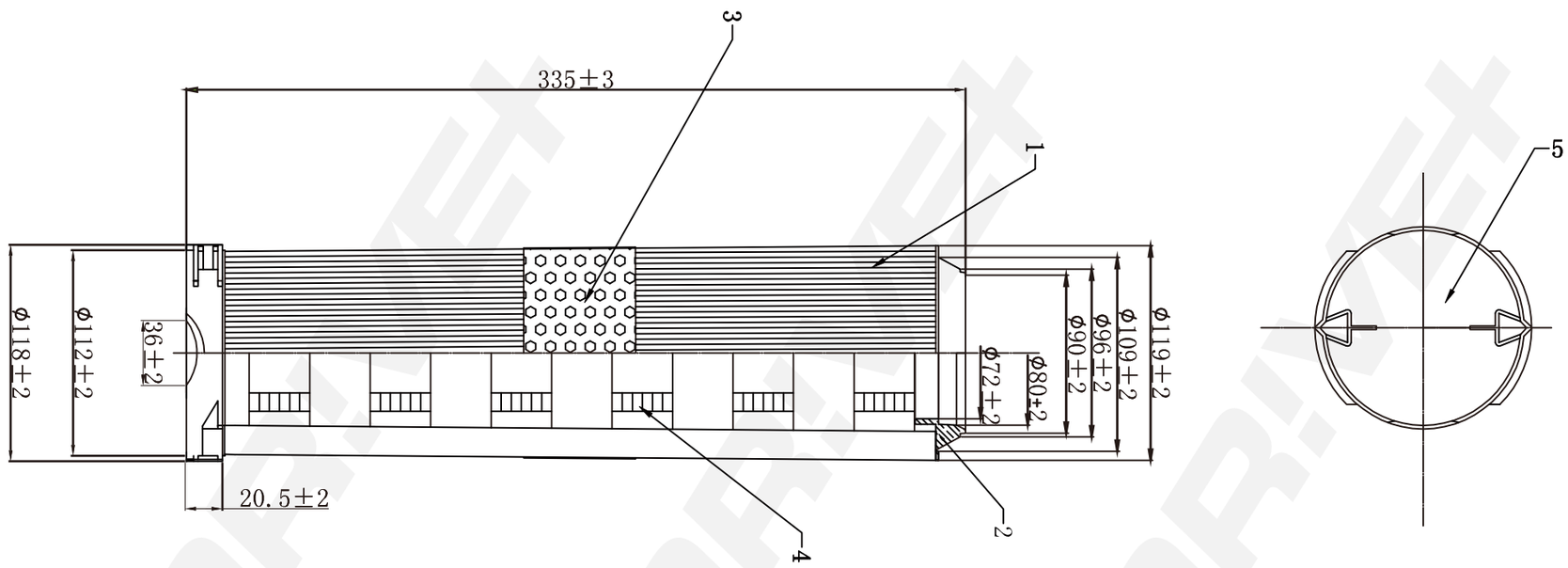

DP Number	Part Number	Drawing Version Number	Drawing Issue Date
DP1110.10.0245	DFA0245	V1	2025.03.19