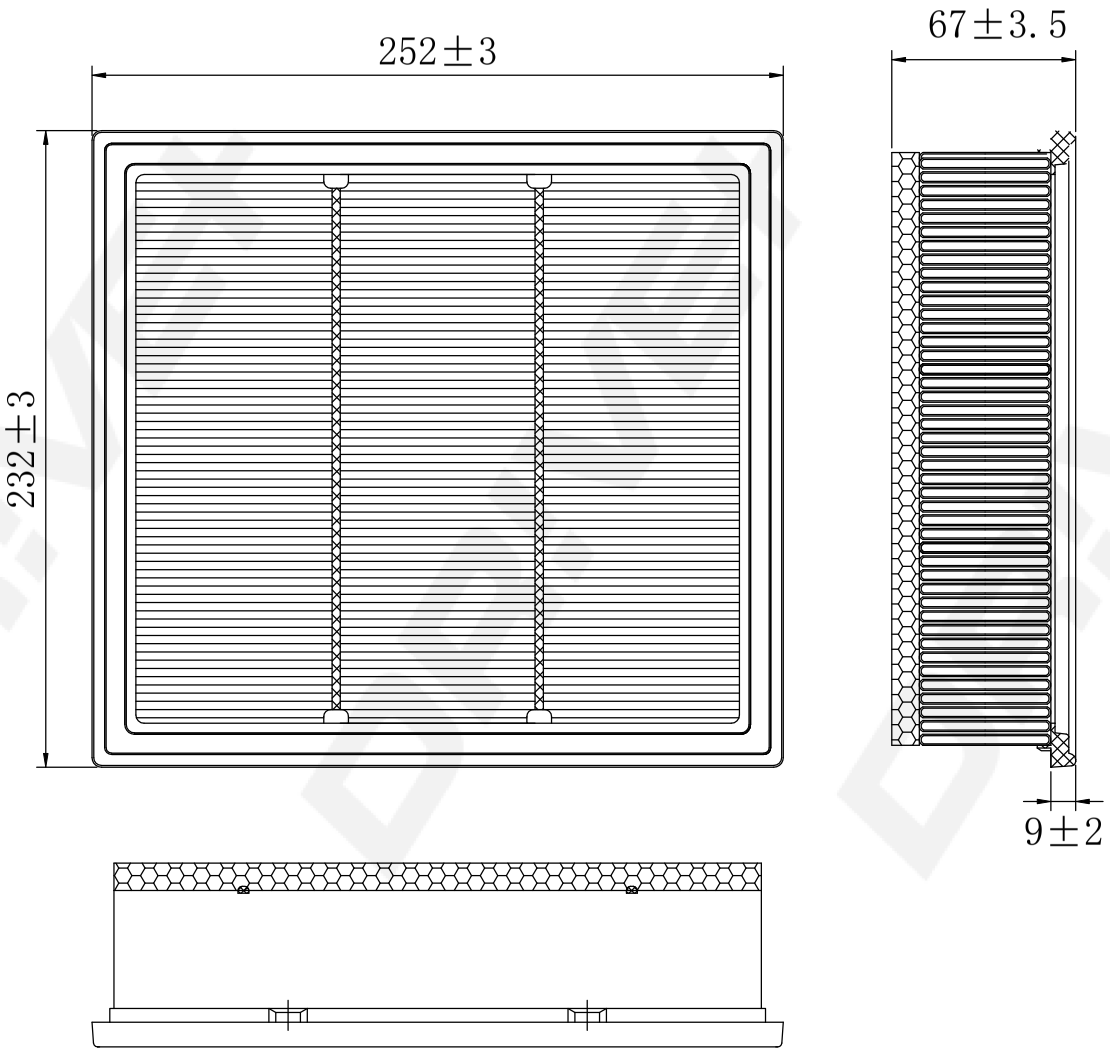

DP Number	Part Number	Drawing Version Number	Drawing Issue Date
DP1110.10.0512	DFA0512	V1	2025.04.12