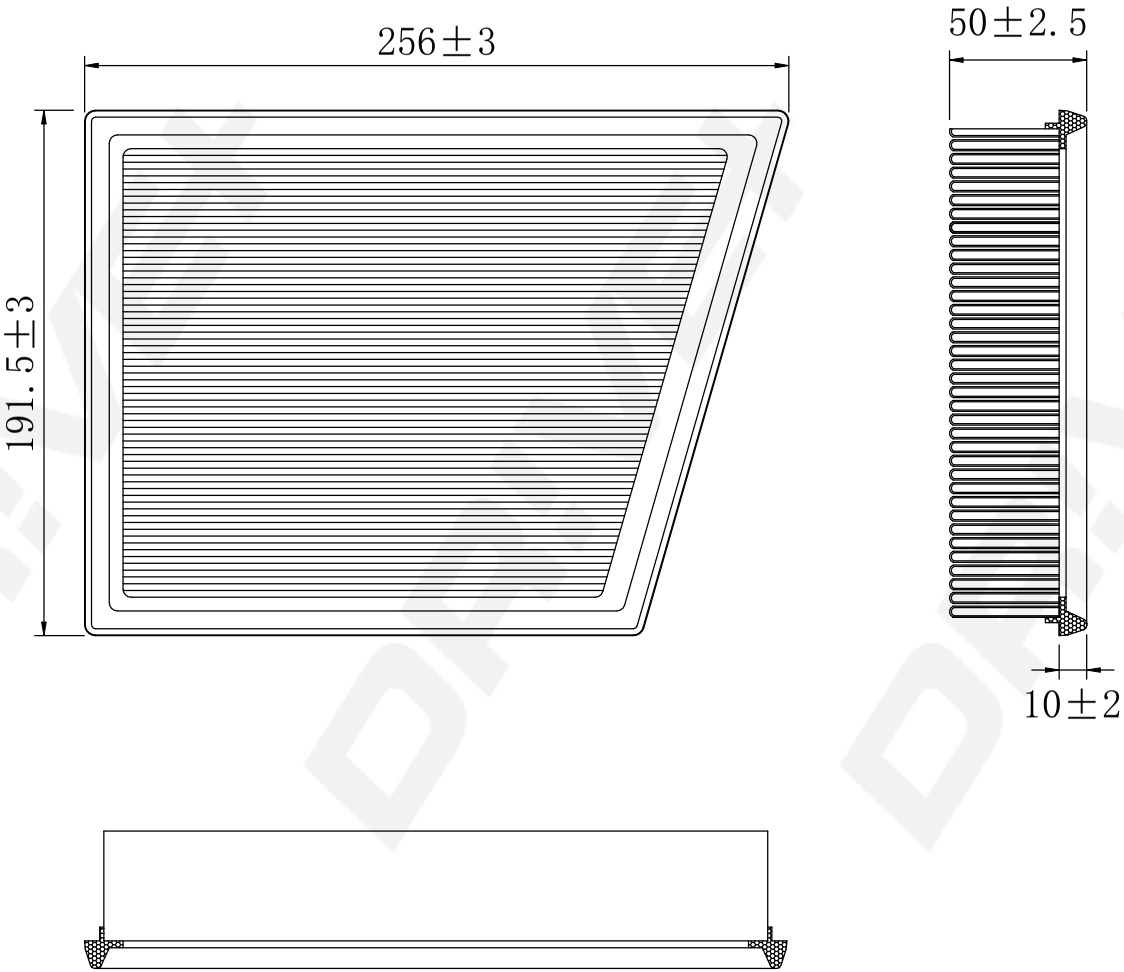

DP Number	Part Number	Drawing Version Number	Drawing Issue Date
DP1110.10.0692	DFA0692	V1	2025.05.08