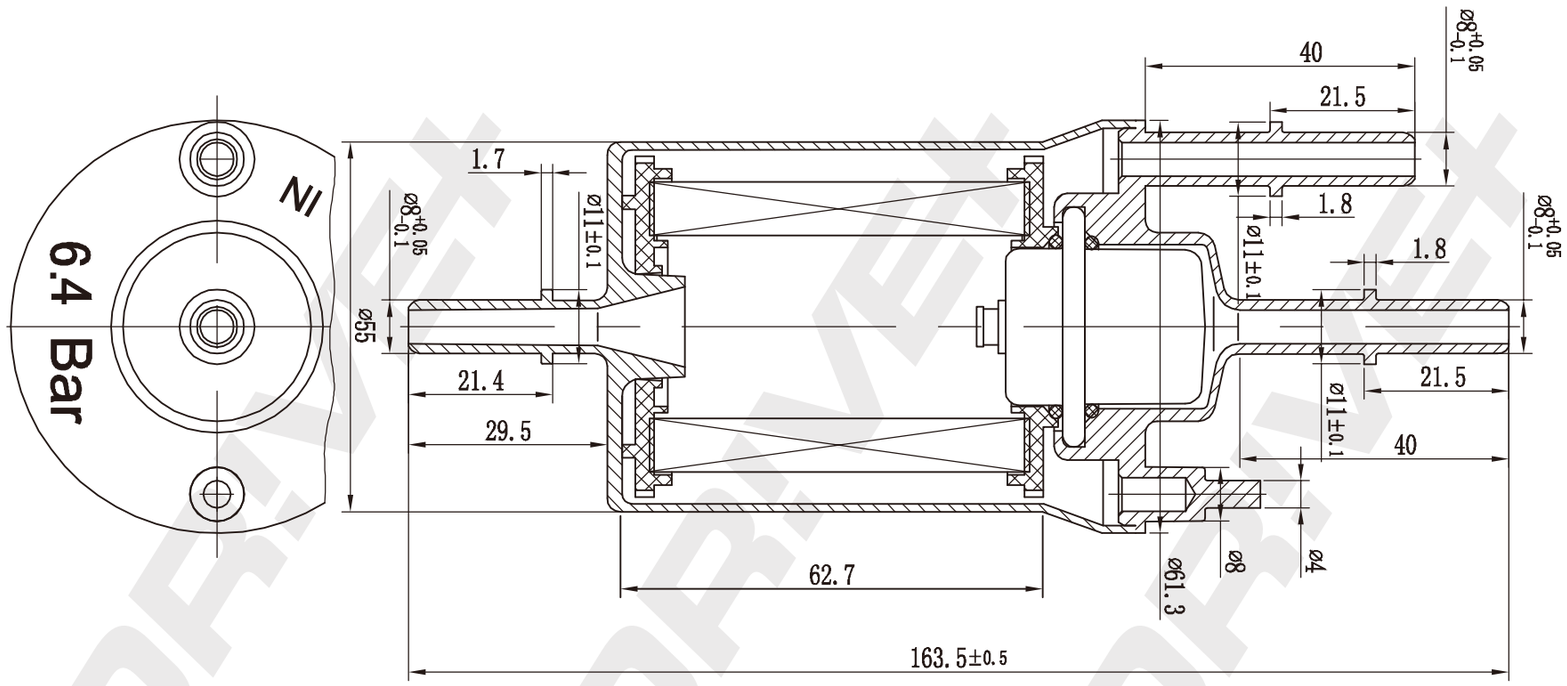

DP Number	Part Number	Drawing Version Number	Drawing Issue Date
DP1110.13.0020	DFF0020	V1	2025.03.04