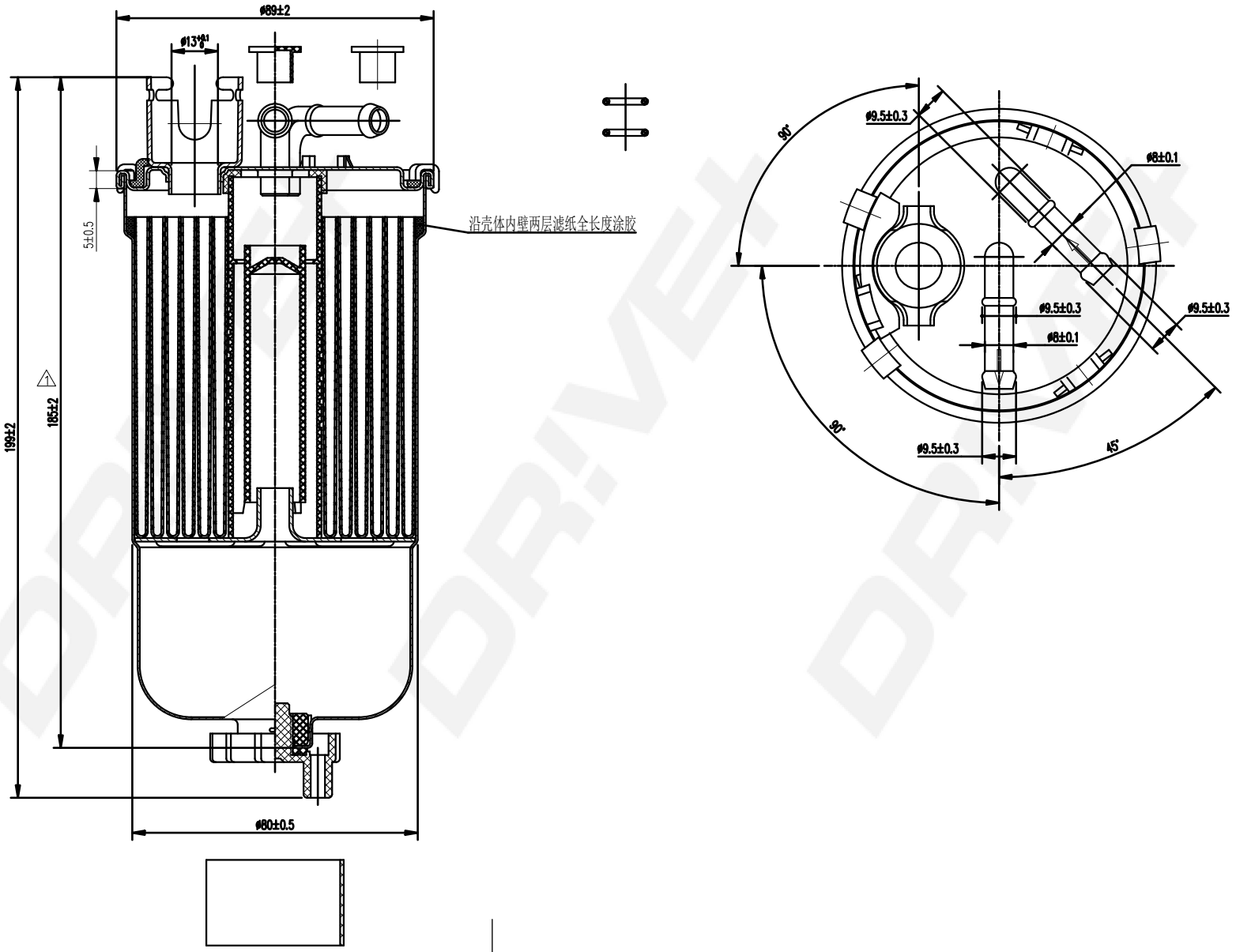

DP Number	Part Number	Drawing Version Number	Drawing Issue Date
DP1110.13.0045	DFF0045	V1	2025.05.20