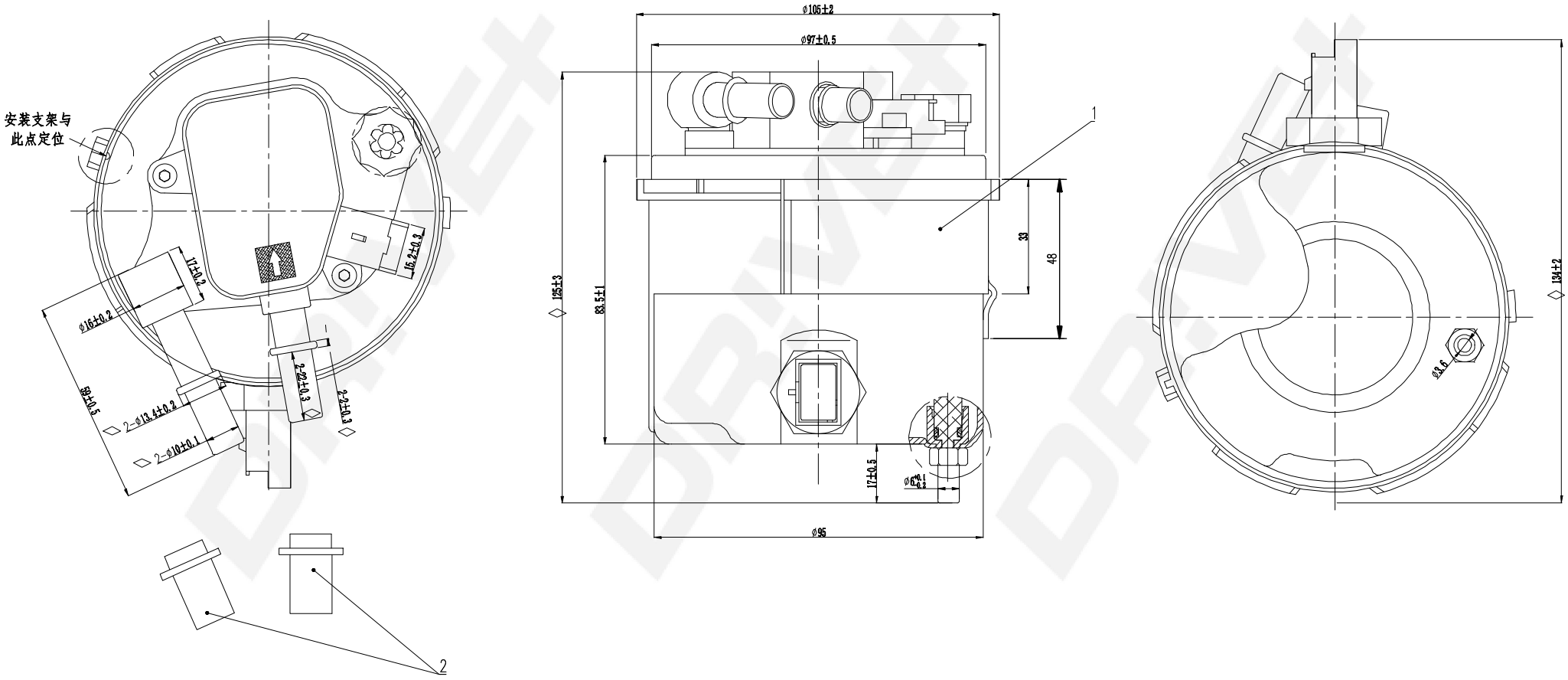

DP Number	Part Number	Drawing Version Number	Drawing Issue Date
DP1110.13.0080	DFF0080	V1	2025.05.20