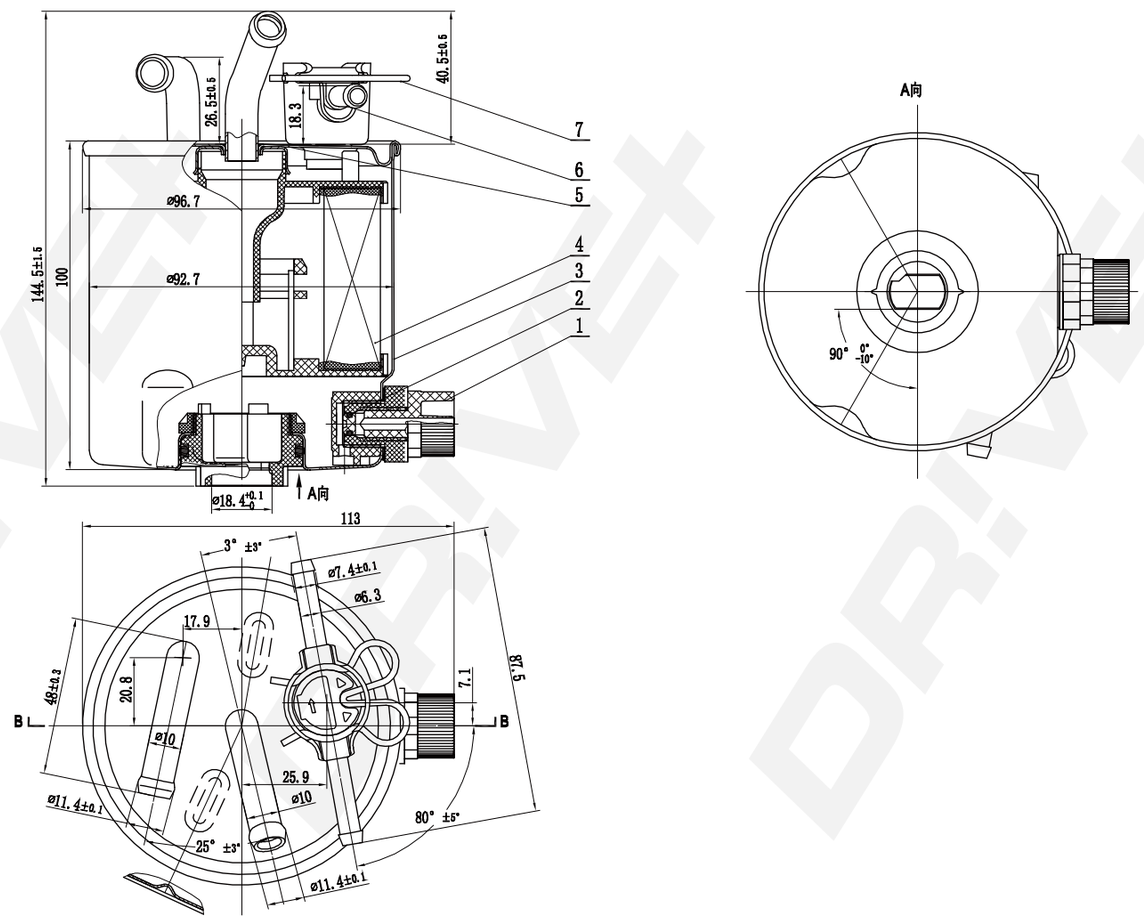

DP Number	Part Number	Drawing Version Number	Drawing Issue Date
DP1110.13.0216	DFF0216	V1	2025.03.21