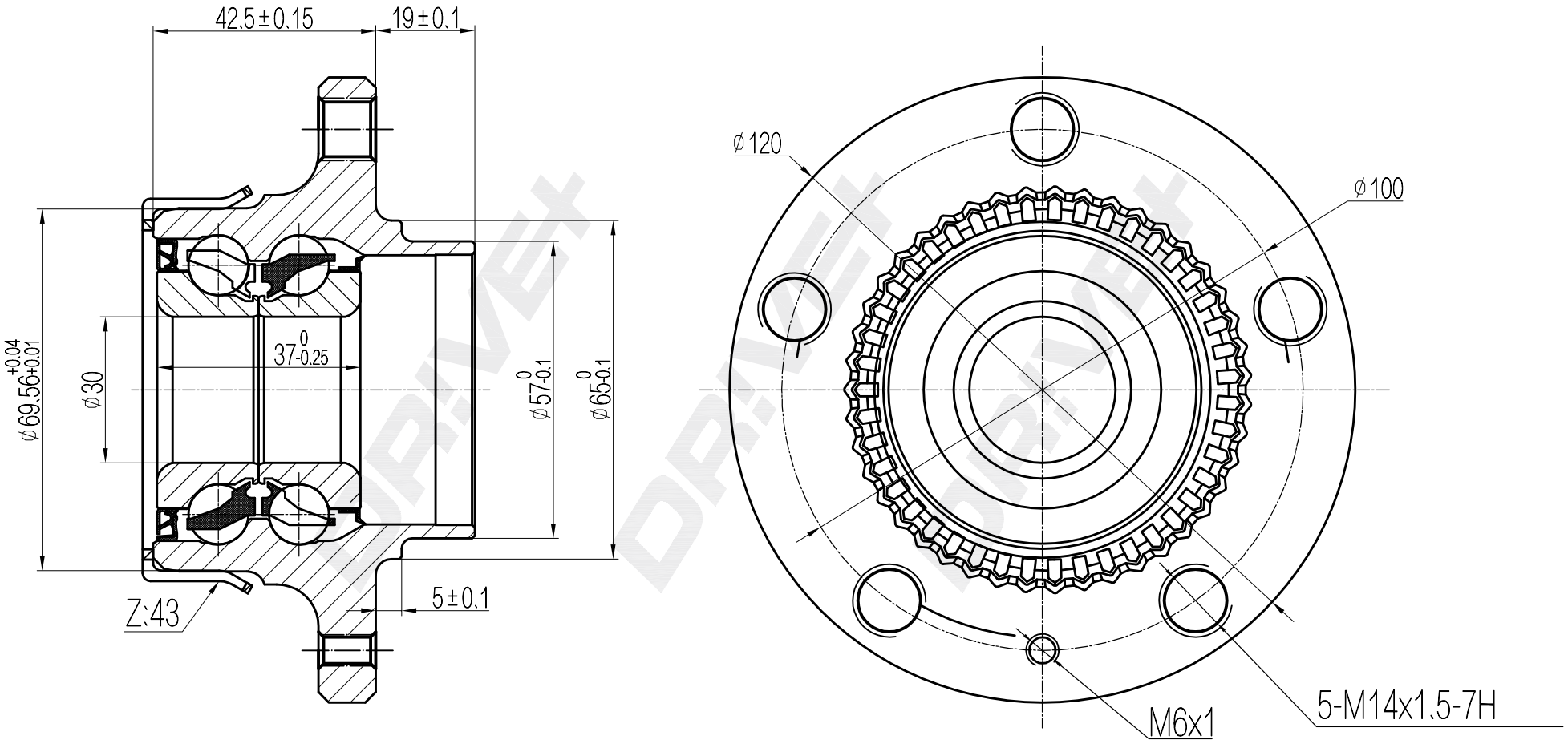

DP Number	Part Number	Drawing Version Number	Drawing Issue Date
DP2010.10.0107	DRW0107	V1	2025.06.02