Involute spline	
TEETH	36
Modulus	0.79375
Pressure Angle	45°
Large diameter	$\phi 28.9^{+0.12}_{0}$
Small diameter	$\phi 27.4^{+0.12}_{0}$
Measuring rod	Ø1.8
Bar spacing	24.92-24.98

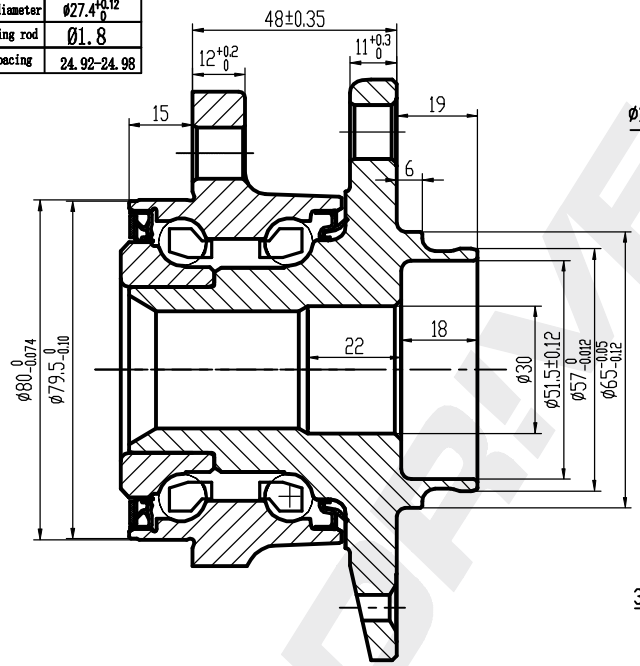

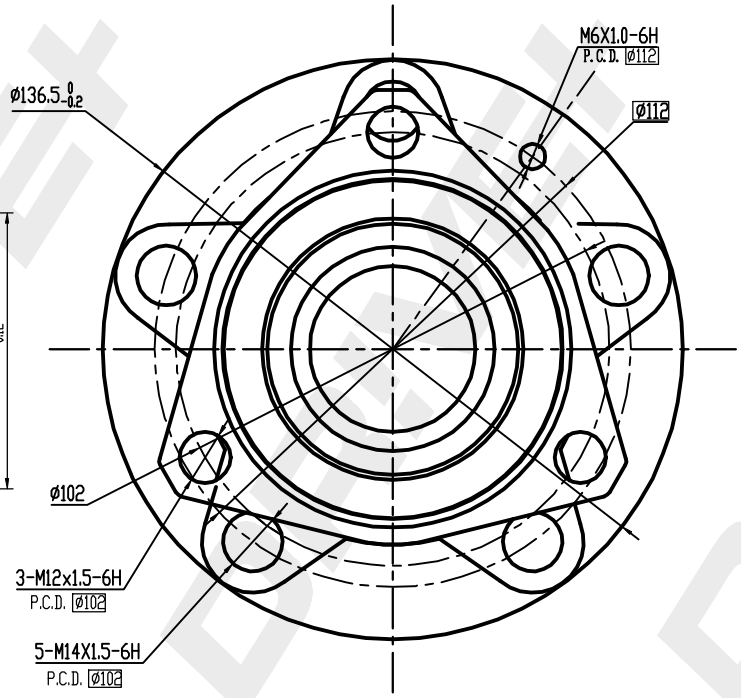

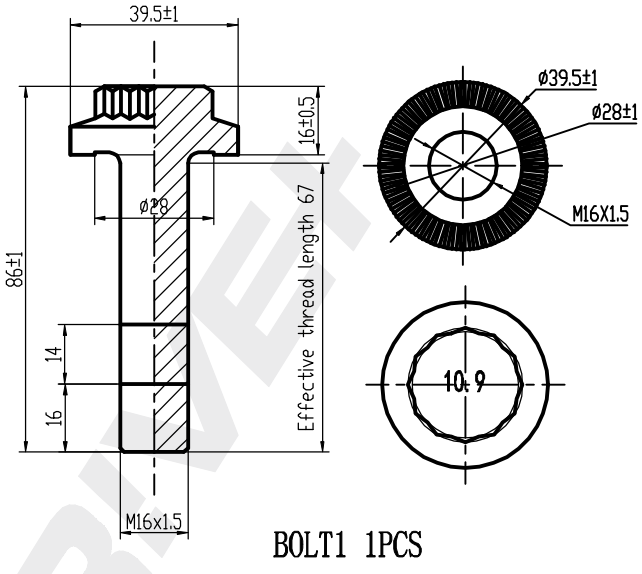

BOLT1 1PCS

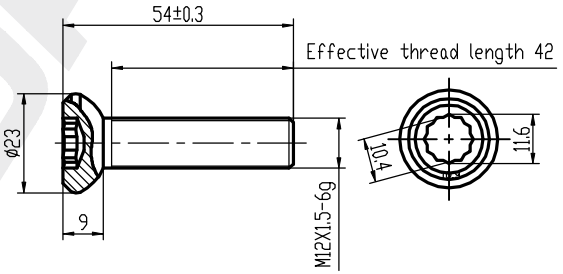

BOLT2 3PCS

DP Number	Part Number	Drawing Version Number	Drawing Issue Date
DP2010.10.0112	DRW0112	V1	2025.06.23

DRIVE+