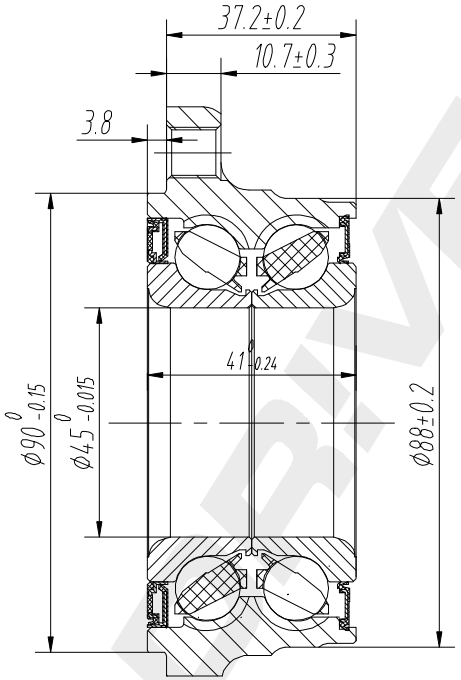

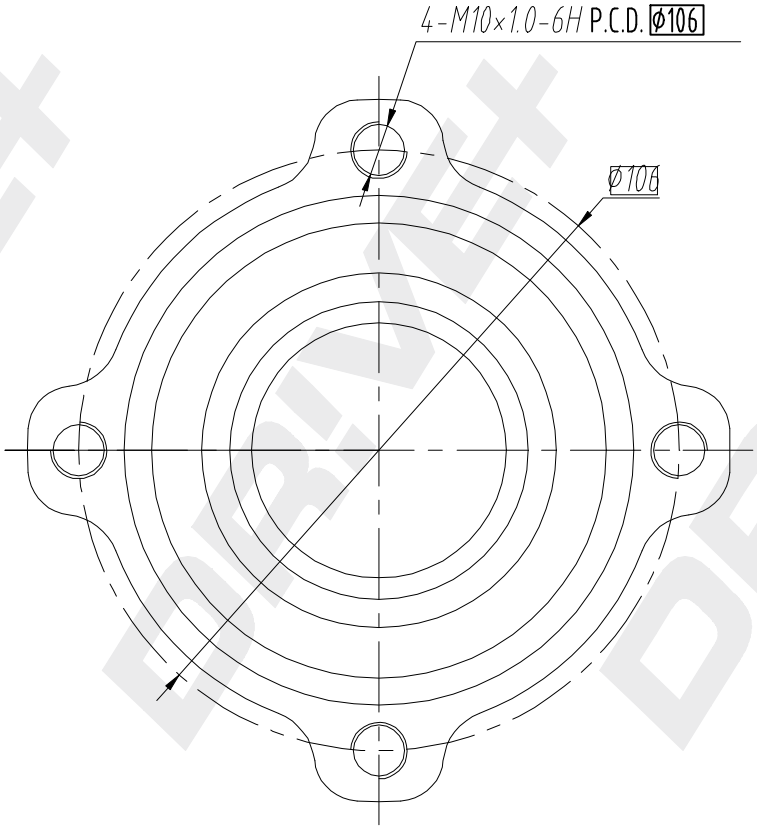

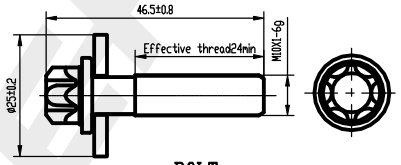

BOLT
4pcs Galvanizing

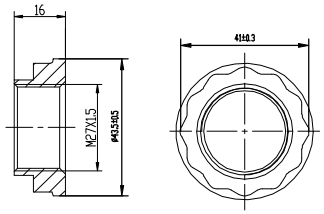

NUT
1pcs Galvanizing

DP Number	Part Number	Drawing Version Number	Drawing Issue Date
DP2010.10.0123	DRW0123	V1	2025.07.03

DRIVE+