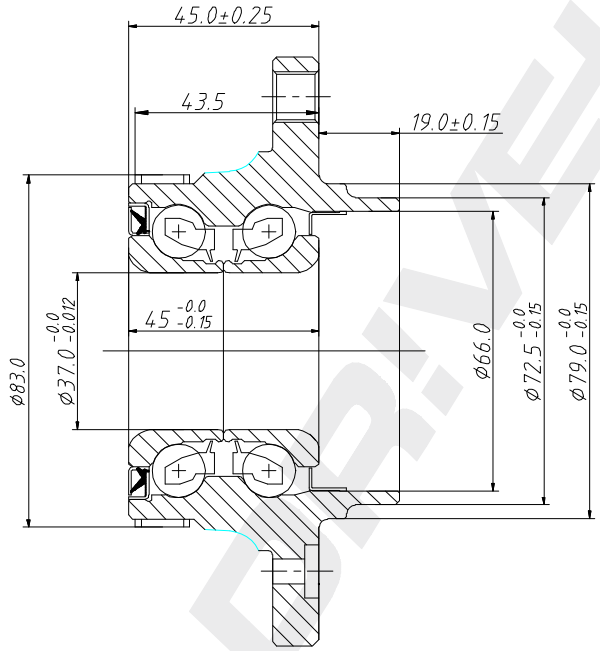


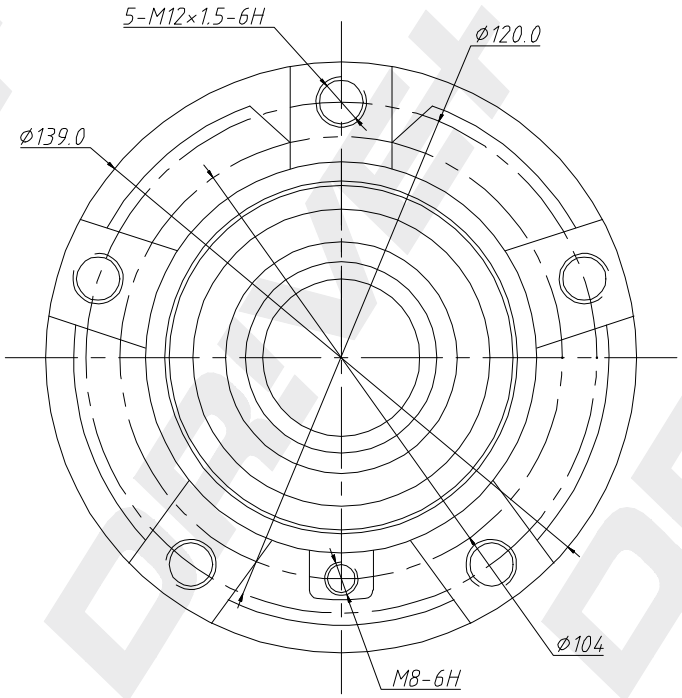


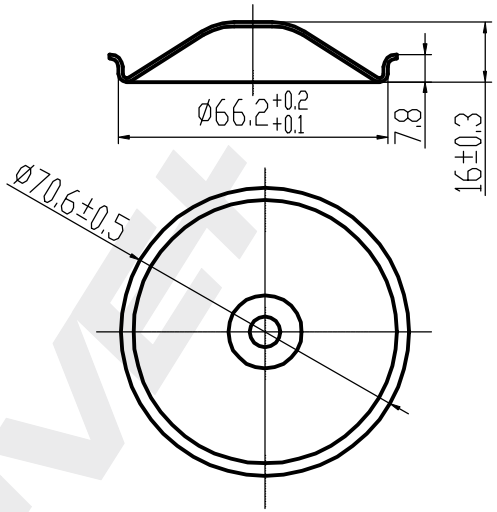


CAP

1pcs Galvanizing

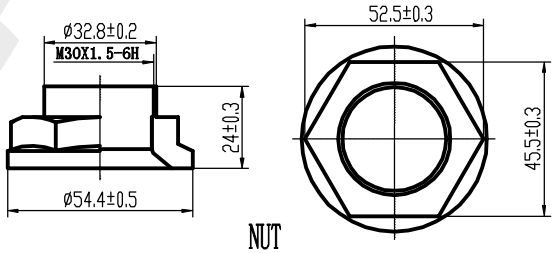


NUT

1pcs Galvanizing

| DP Number | Part Number | Drawing Version Number | Drawing Issue Date |
|---|---|---|---|
| DP2010.10.0144 | DRW0144 | V1 | 2025.07.03 |

DRIVE+