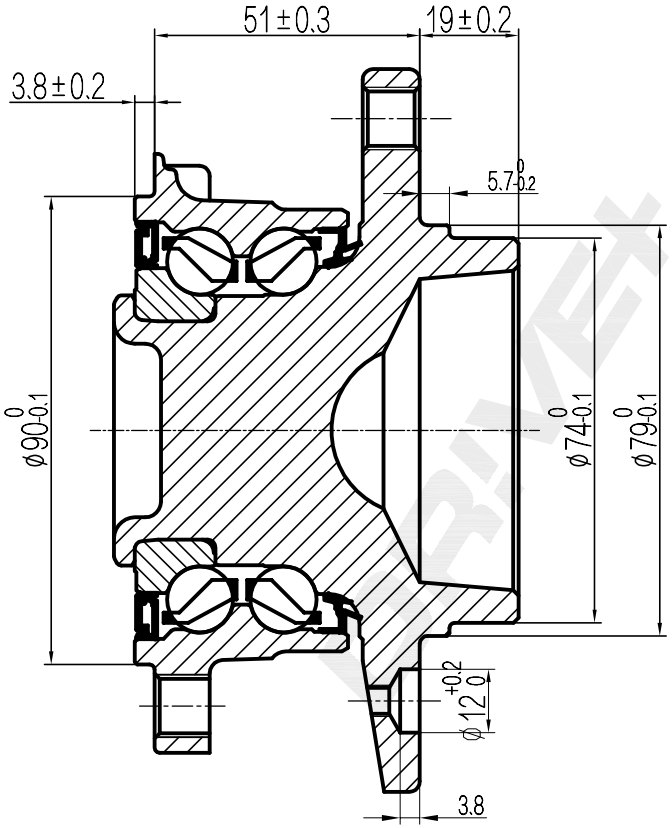

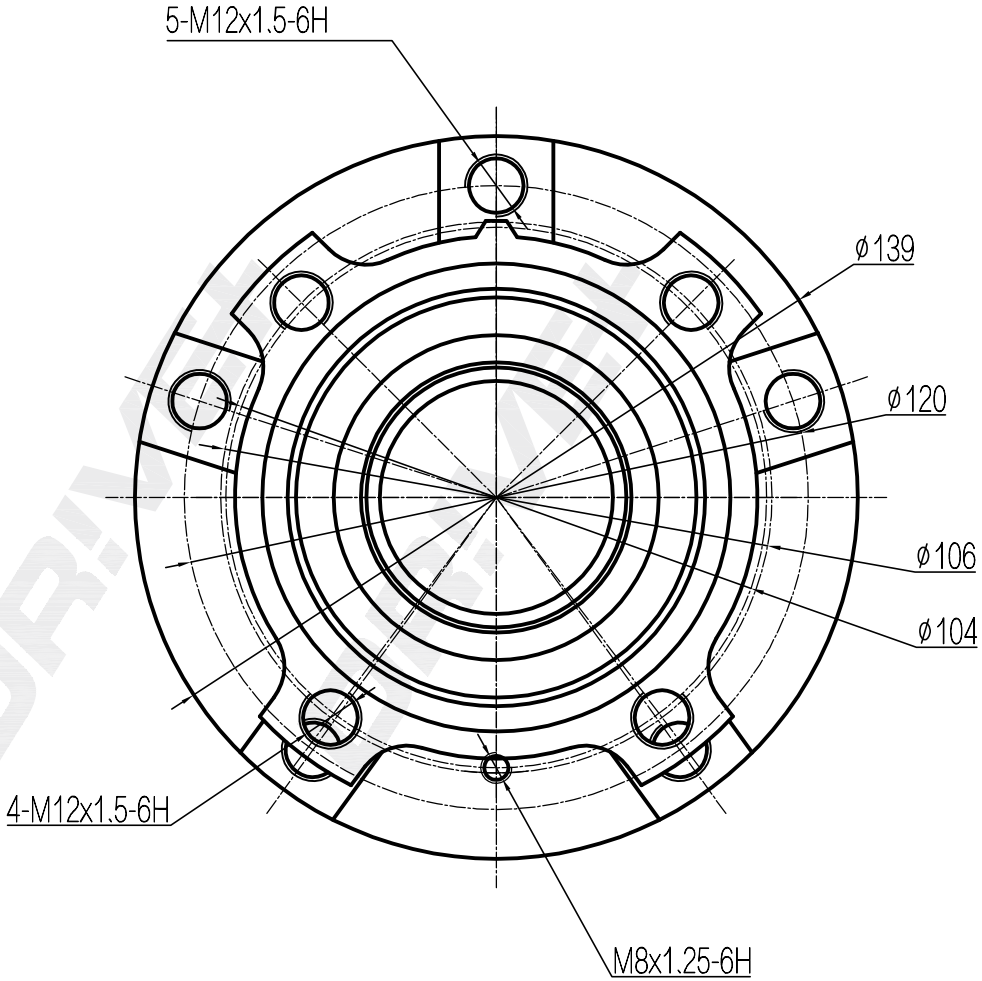

DP Number	Part Number	Drawing Version Number	Drawing Issue Date
DP2010.10.0146	DRW0146	V1	2025.06.03