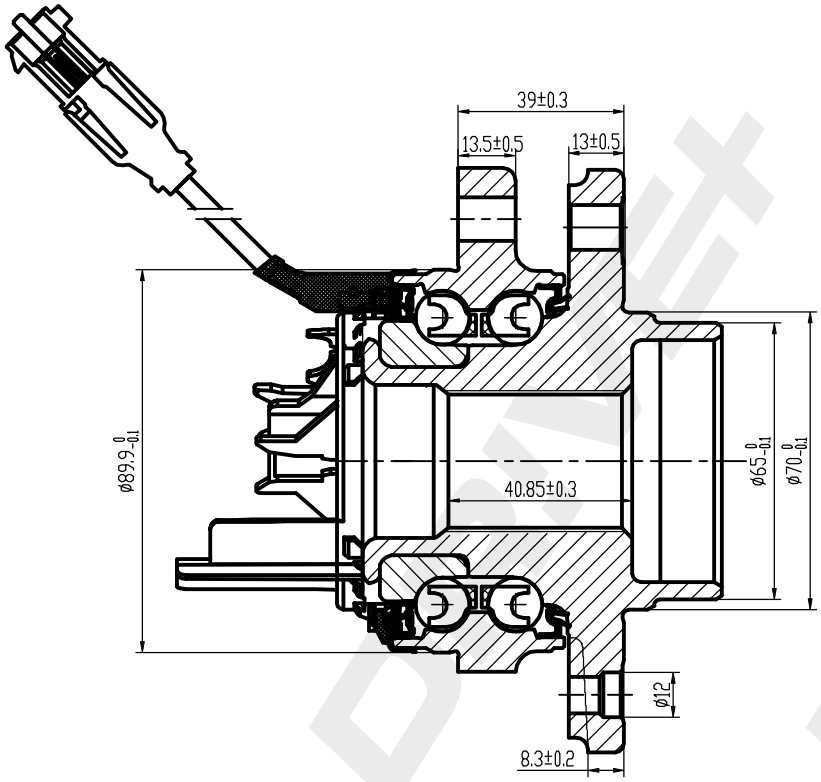

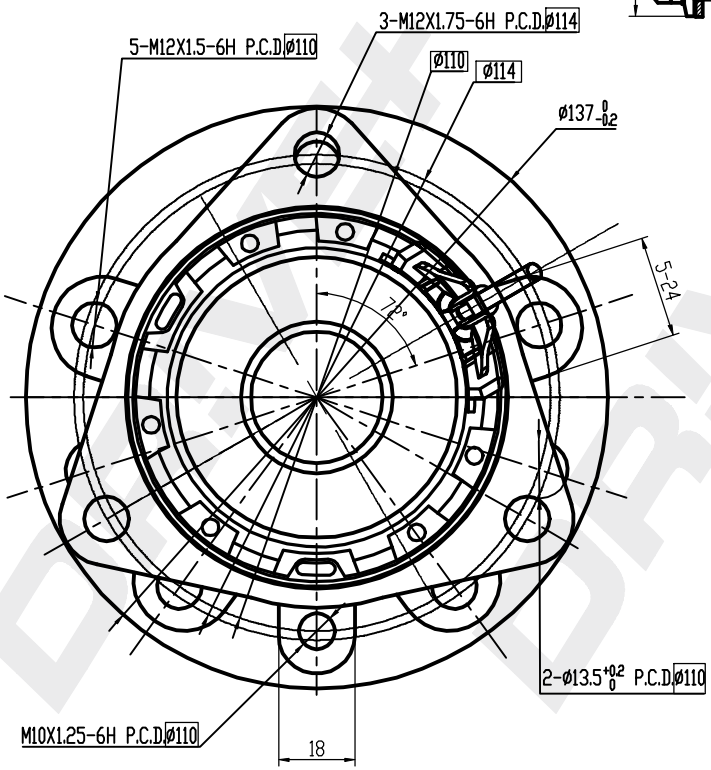

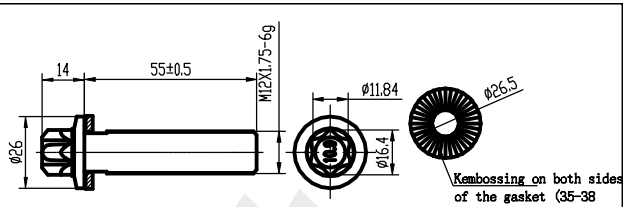

BOLT
3pcs Galvanizing

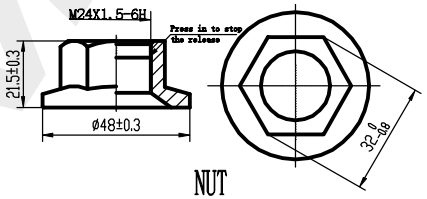

NUT
1pcs Galvanizing

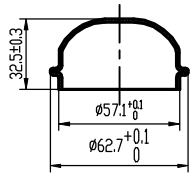

CAP
1pcs Galvanizing

DP Number	Part Number	Drawing Version Number	Drawing Issue Date
DP2010.10.0152	DRW0152	V1	2025.08.15