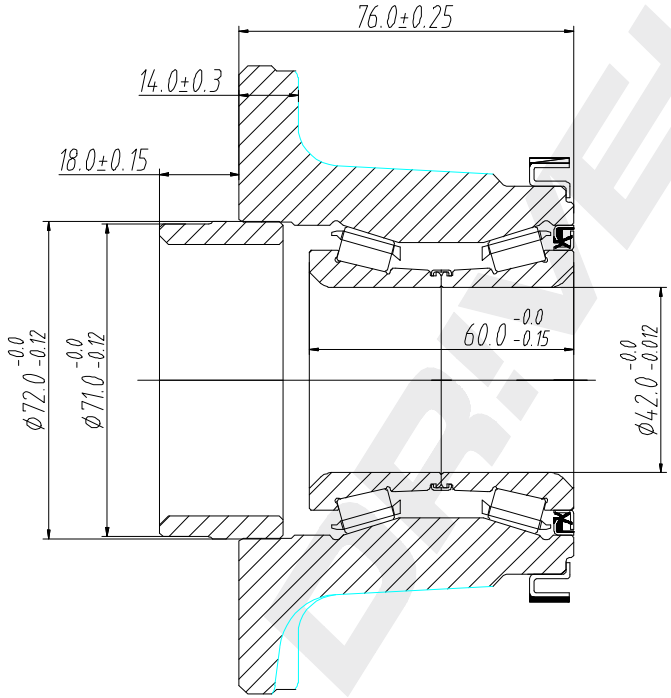

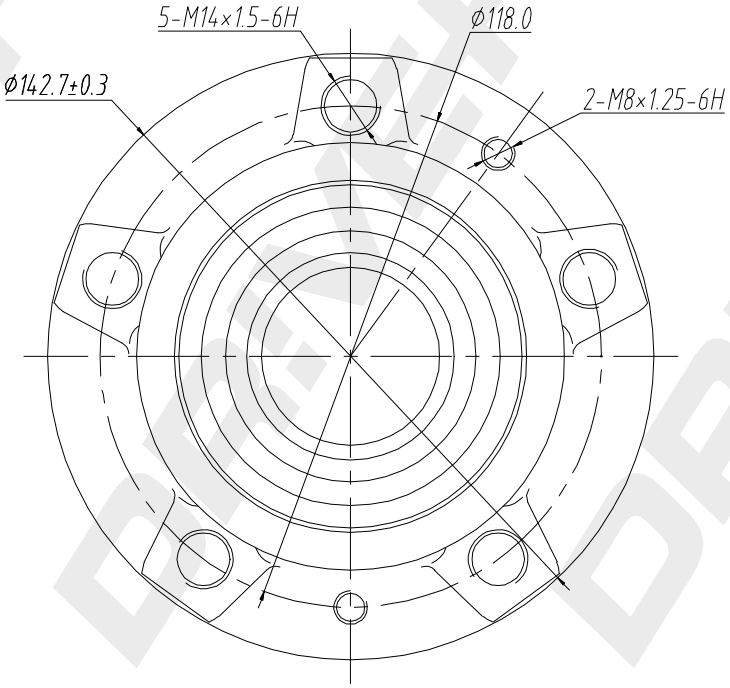

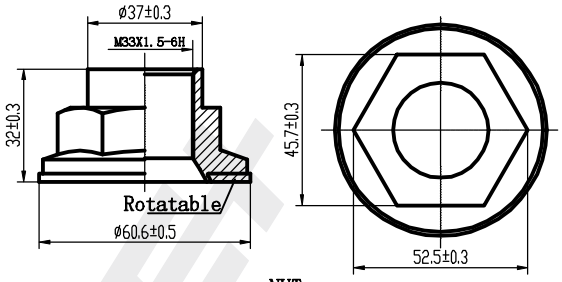

NUT
1pcs Galvanizing

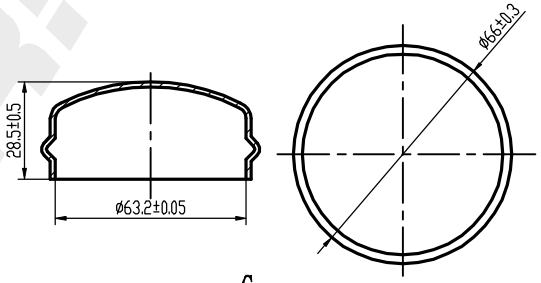

Cap
1pcs Galvanizing

DP Number	Part Number	Drawing Version Number	Drawing Issue Date
DP2010.10.0219	DRW0219	V1	2025.07.03