Involute spline	
Teeth	36
Modulus	0.79375
Pressure Angle	45°
Large diameter	$\phi28.9^{+0.12}_{0}$
Path	$\phi27.4^{+0.12}_{0}$
Measuring rod	ø1.8
Bar spacing	24.92–24.98

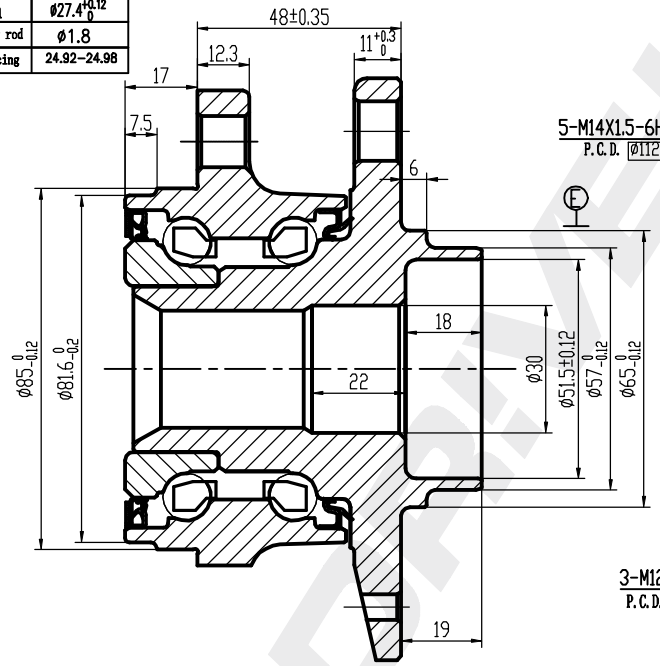

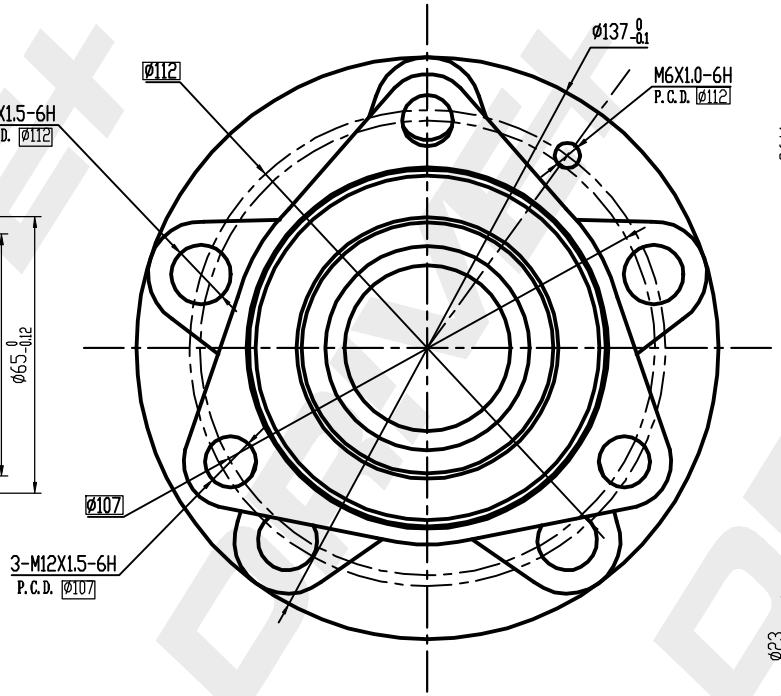

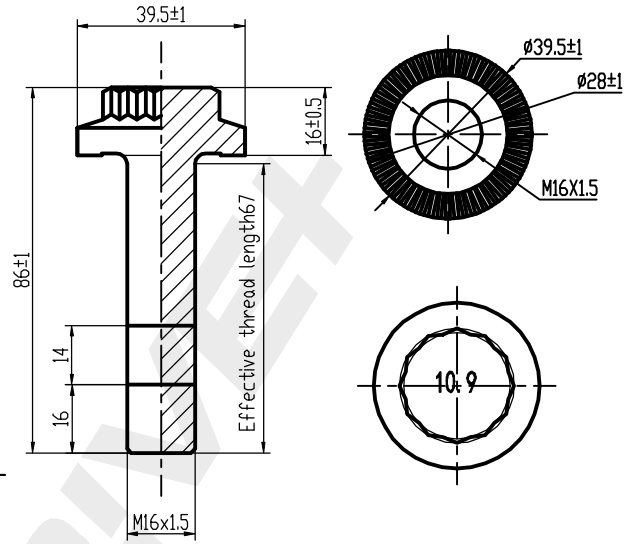

BPLT1 1PCS Black

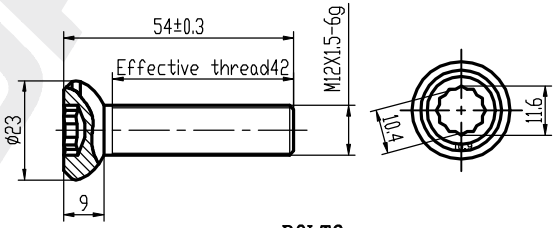

BOLT2
3PCS

DP Number	Part Number	Drawing Version Number	Drawing Issue Date
DP2010.10.0234	DRW0234	V1	2025.06.23

DRIVE+