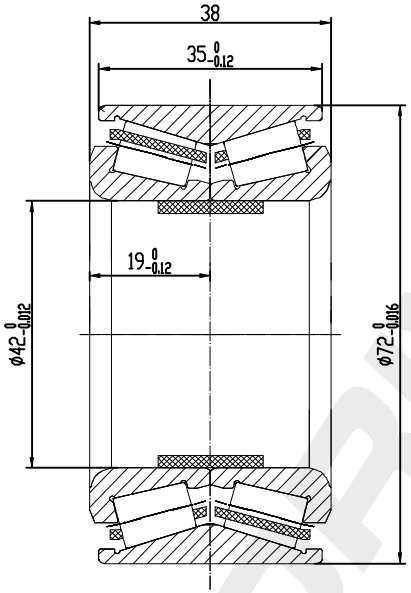

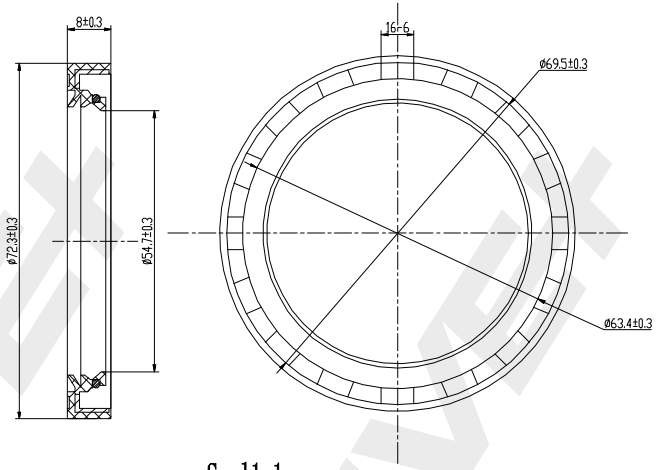

Seal1 1pcs

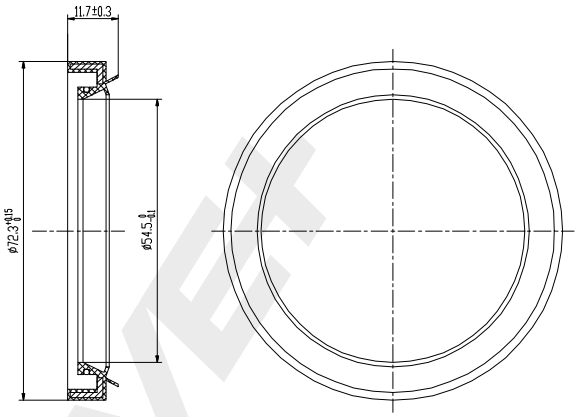

Seal2 1pcs

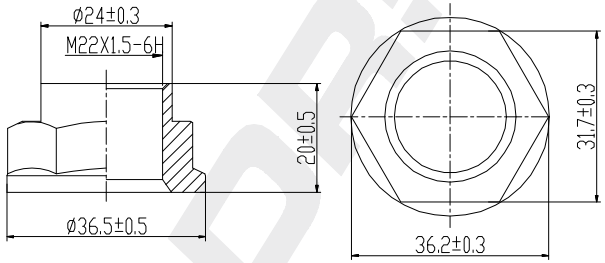

NUT
1pcs Galvanizing

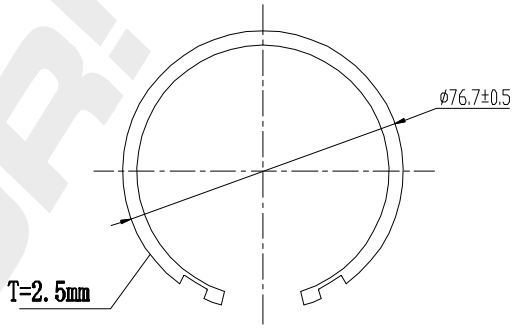

Circlip
1pcs Black

DP Number	Part Number	Drawing Version Number	Drawing Issue Date
DP2010.10.0230	DRW0230	V1	2025.06.23