Involute spline parameters	
Modulus	1.0
Teeth	26
Pressure Angle	45°
Dividing circle	ø26
Diameter of the rod	$23.08^{+0.06}_{0}$(ø2)
Large diameter	$ø27.45^{+0.1}_{0}$
Path	$ø25.45^{+0.13}_{0}$
Measuring rod	2.0
Bar spacing	$23.05^{+0.04}_{0}$

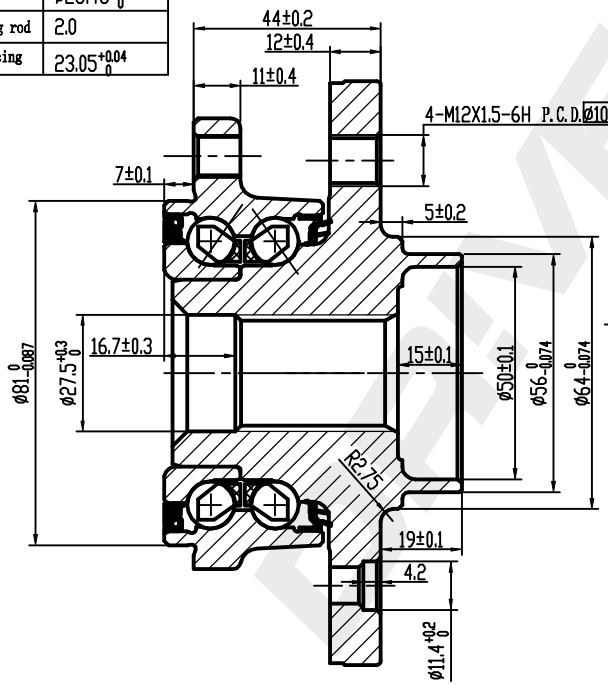

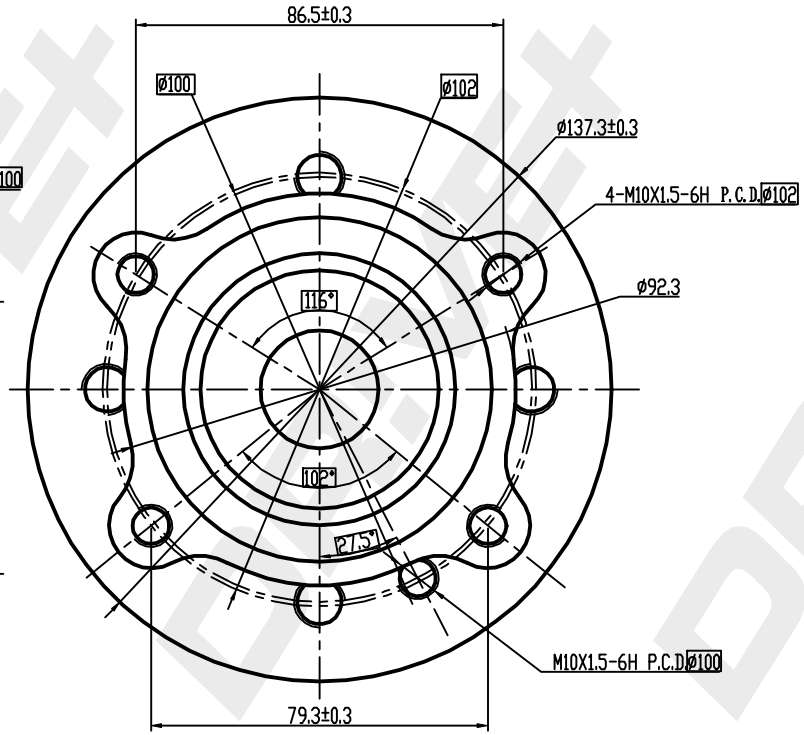

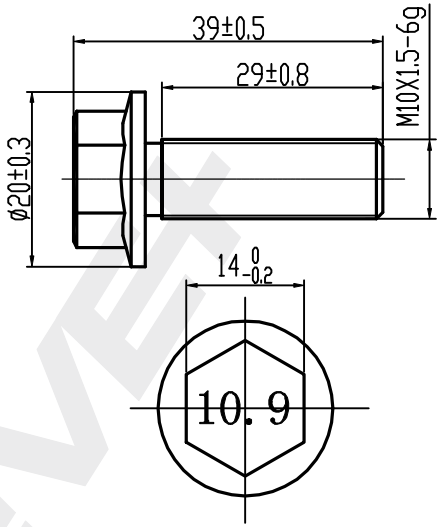

BOLT

4pcs Galvanizing

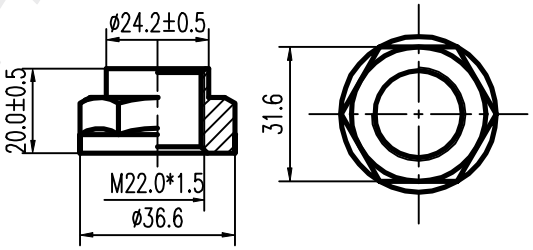

NUT

1pcs Galvanizing

DP Number	Part Number	Drawing Version Number	Drawing Issue Date
DP2010.10.0247	DRW0247	V1	2025.06.23

DRIVE+