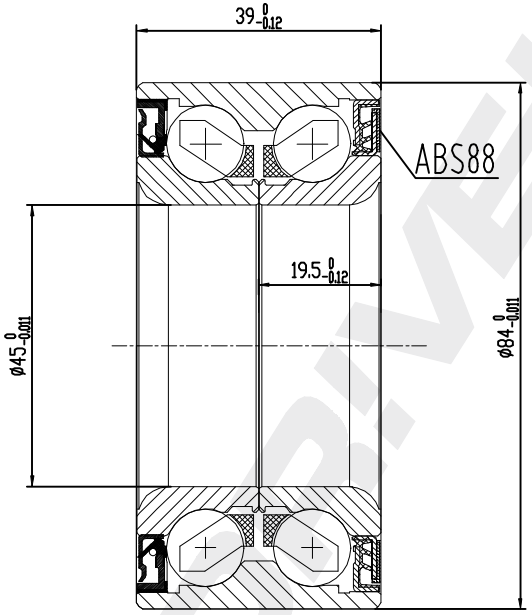

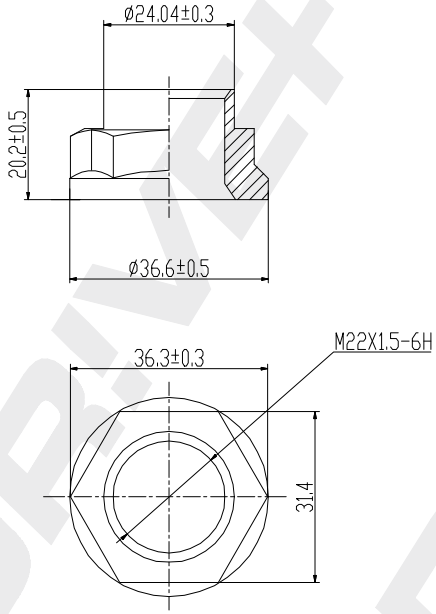

NUT
1pcs Galvanizing

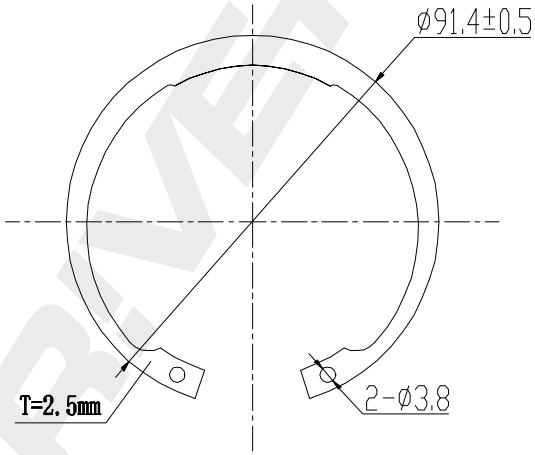

Circlip
1pcs black

DP Number	Part Number	Drawing Version Number	Drawing Issue Date
DP2010.10.0279	DRW0279	V1	2025.06.23