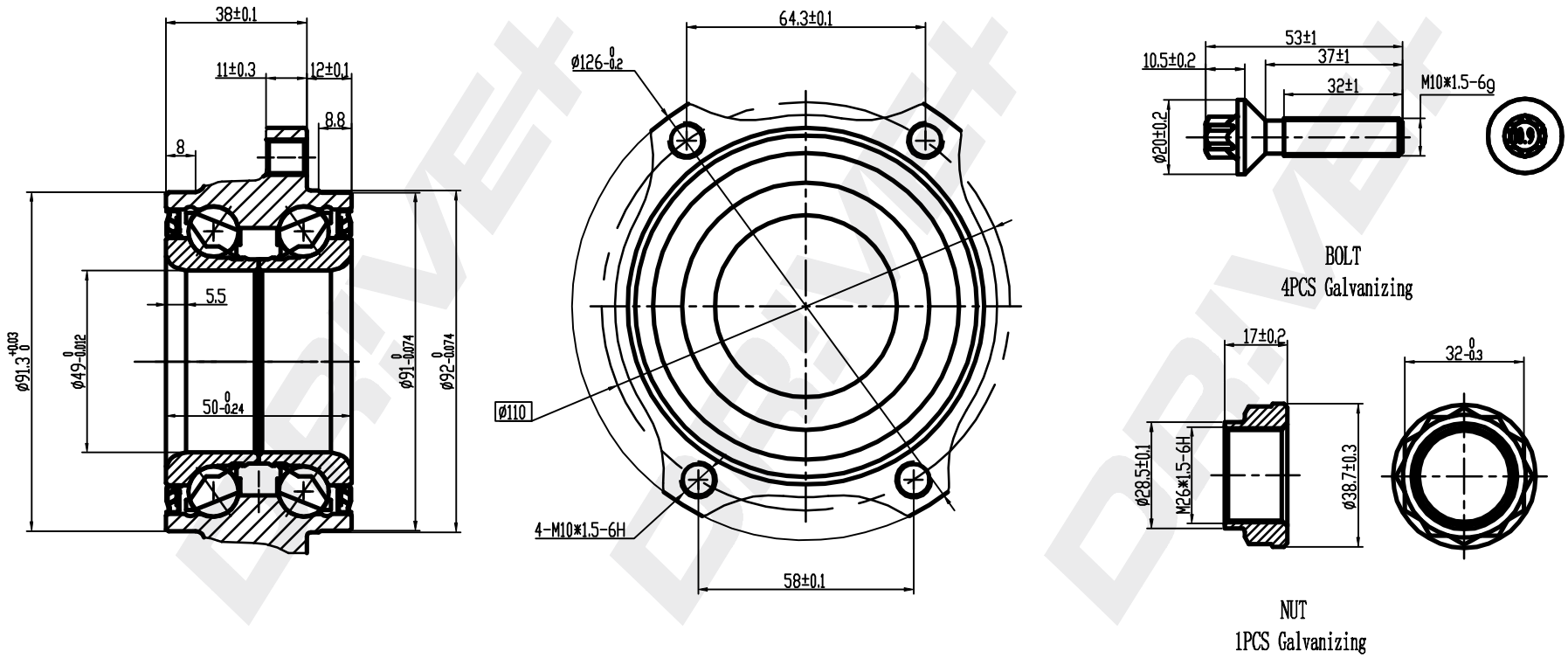

DP Number	Part Number	Drawing Version Number	Drawing Issue Date
DP2010.10.0271	DRW0271	V1	2025.06.23