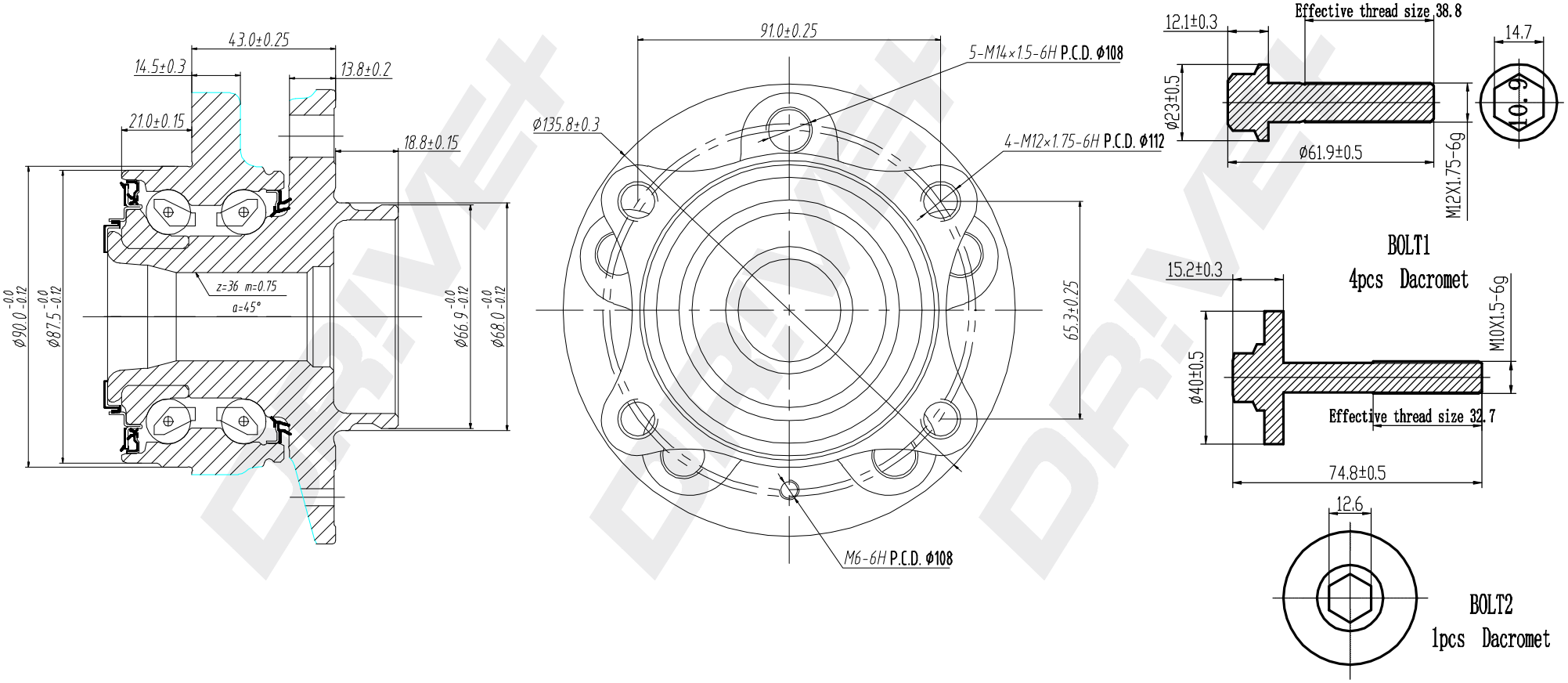

DP Number	Part Number	Drawing Version Number	Drawing Issue Date
DP2010.10.0365	DRW0365	V1	2025.07.04