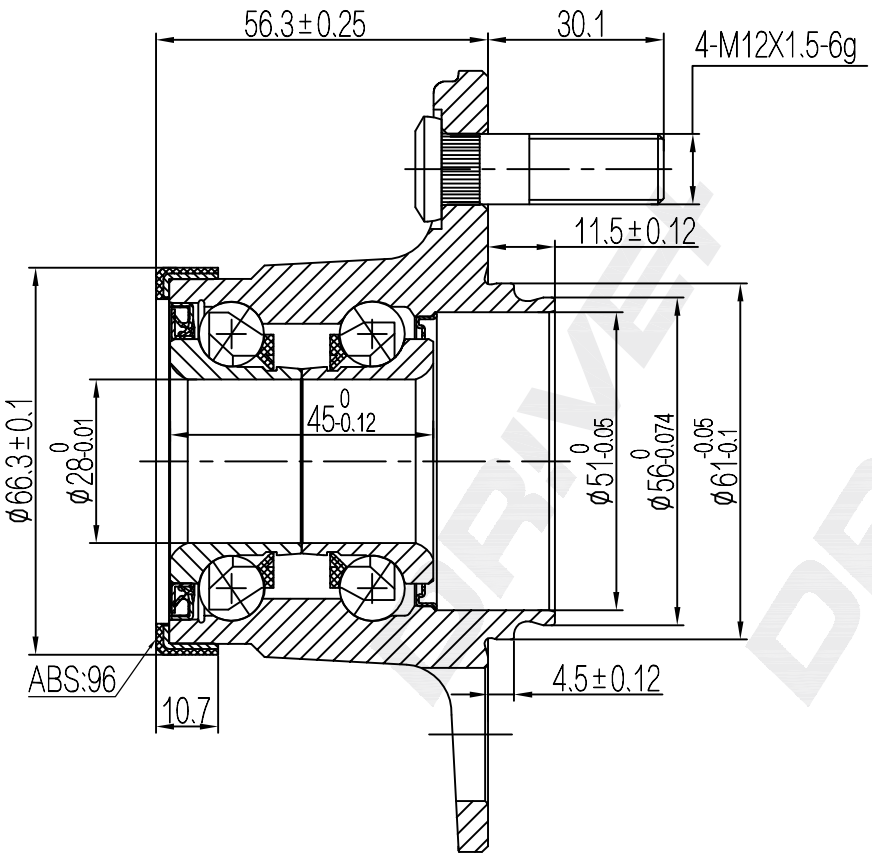

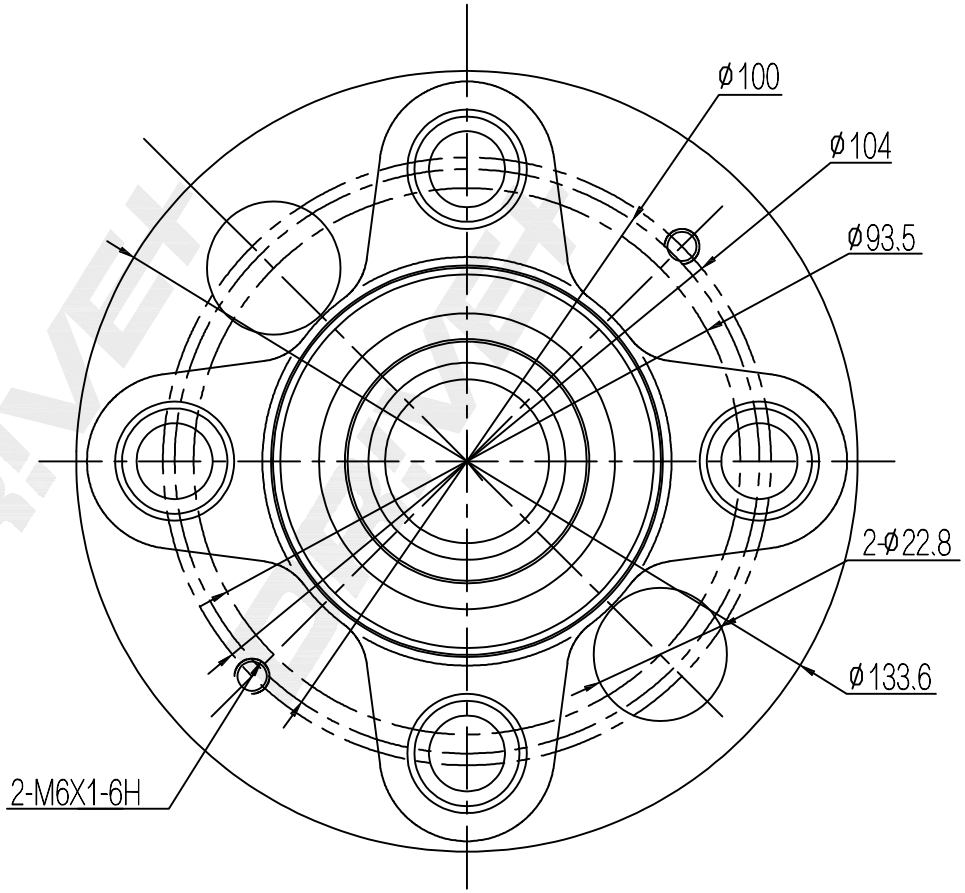

DP Number	Part Number	Drawing Version Number	Drawing Issue Date
DP2010.10.0372	DRW0372	V1	2025.06.04