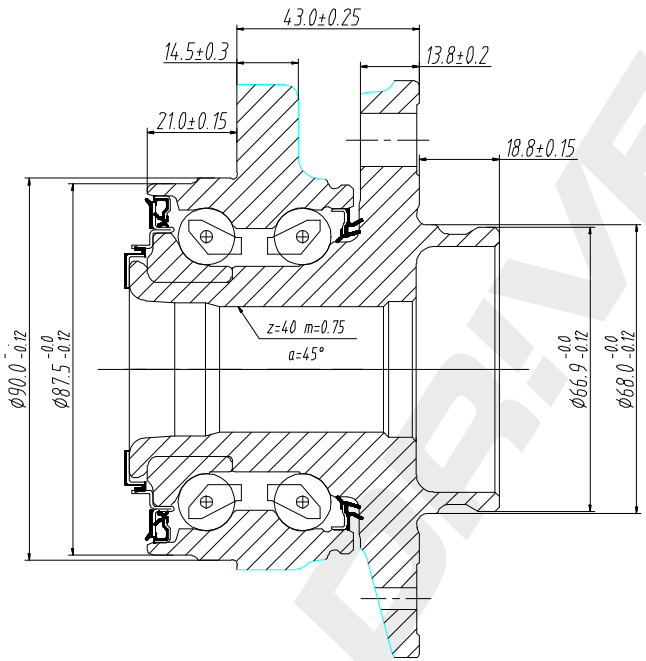

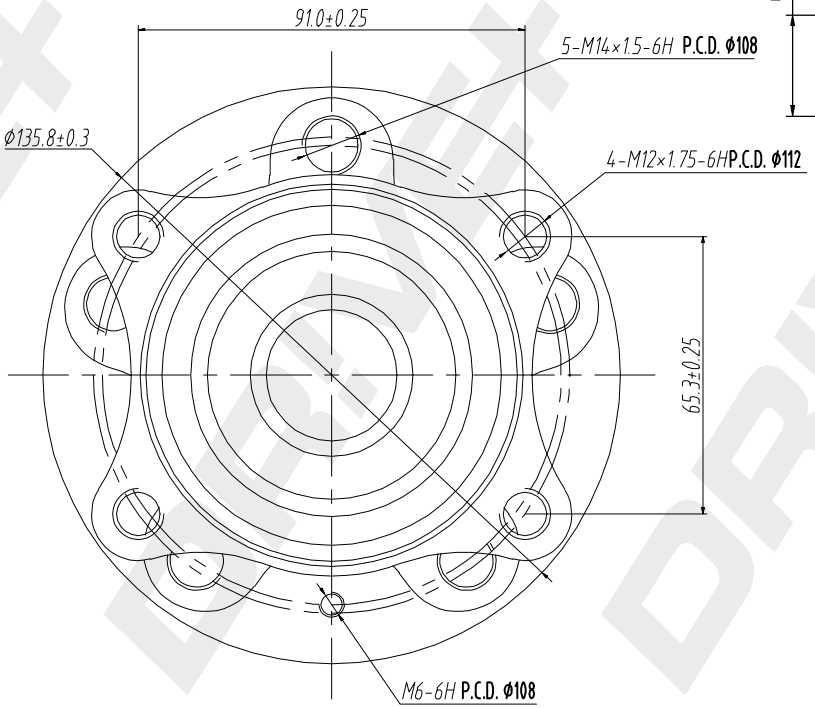

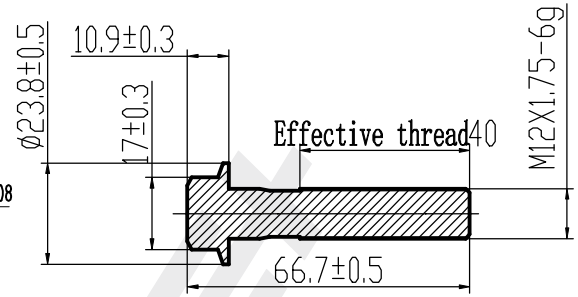

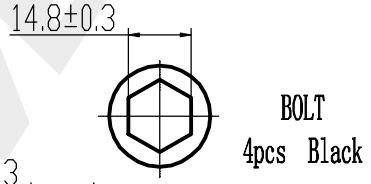

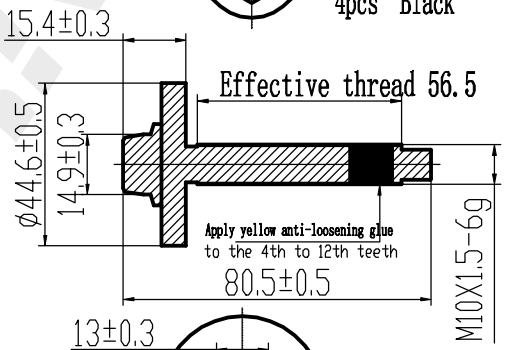

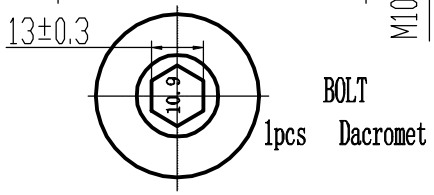

DP Number	Part Number	Drawing Version Number	Drawing Issue Date
DP2010.10.0404	DRW0404	V1	2025.07.15

DRIVE+