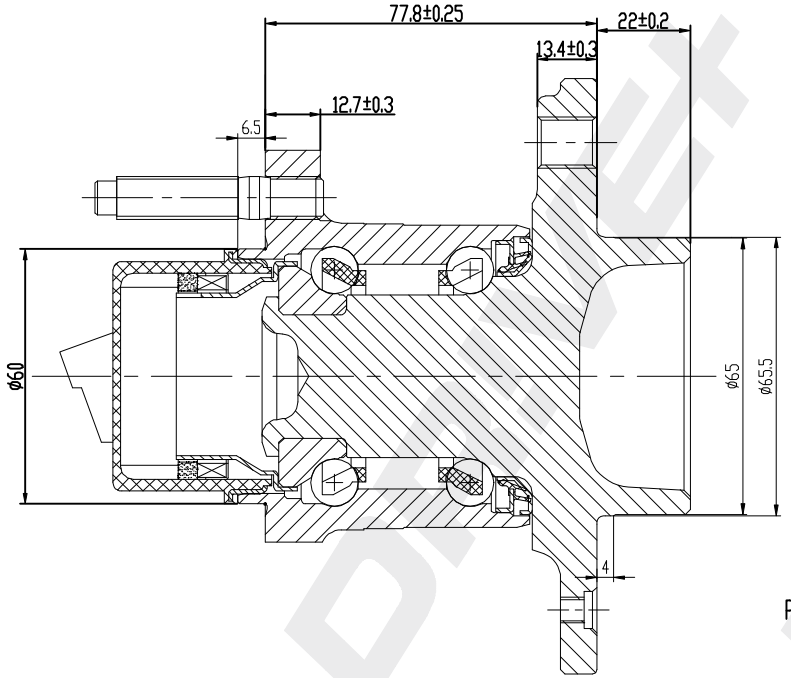

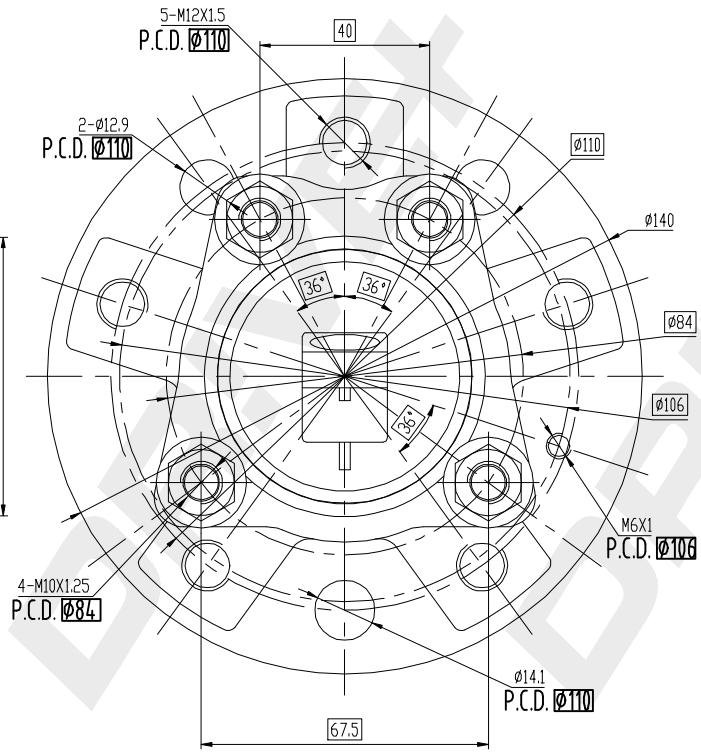

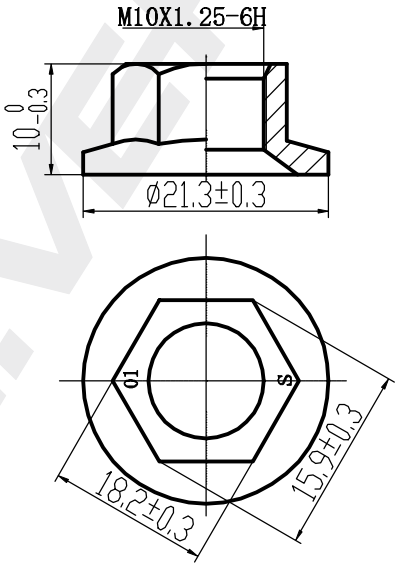

NUT
4pcs Galvanizing

DP Number	Part Number	Drawing Version Number	Drawing Issue Date
DP2010.10.0410	DRW0410	V1	2025.08.15