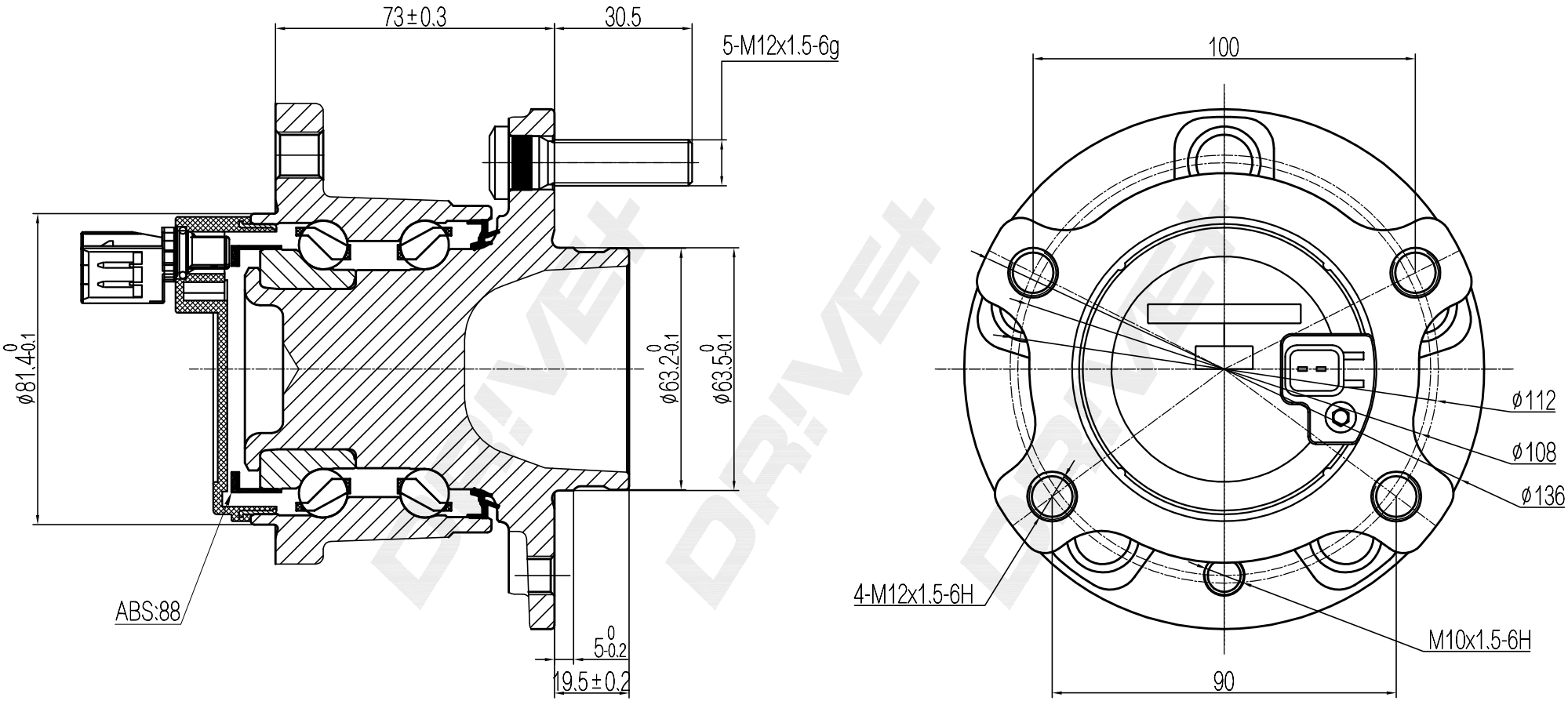

DP Number	Part Number	Drawing Version Number	Drawing Issue Date
DP2010.10.0553	DRW0553	V1	2025.05.13