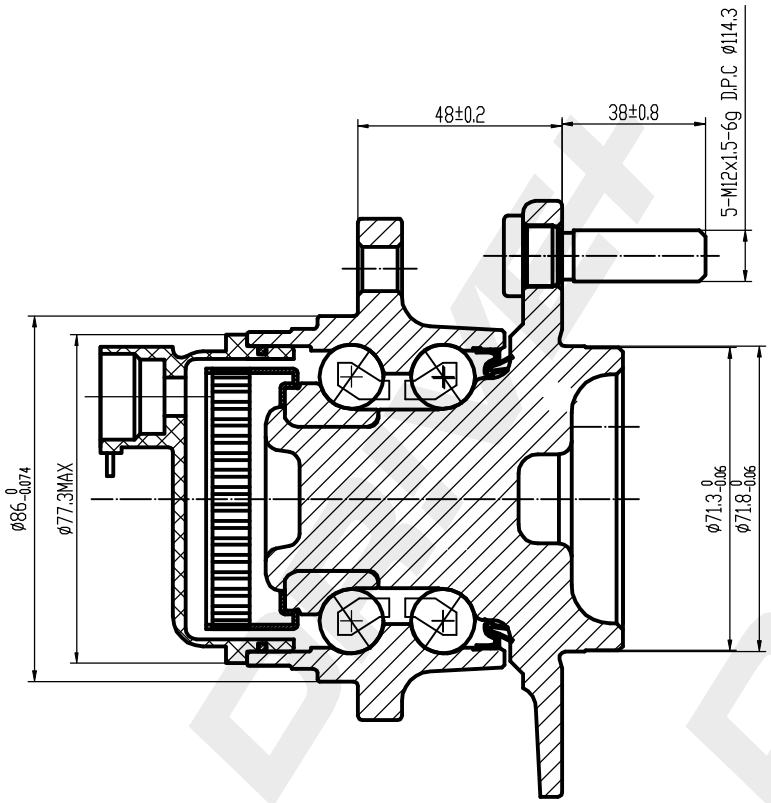

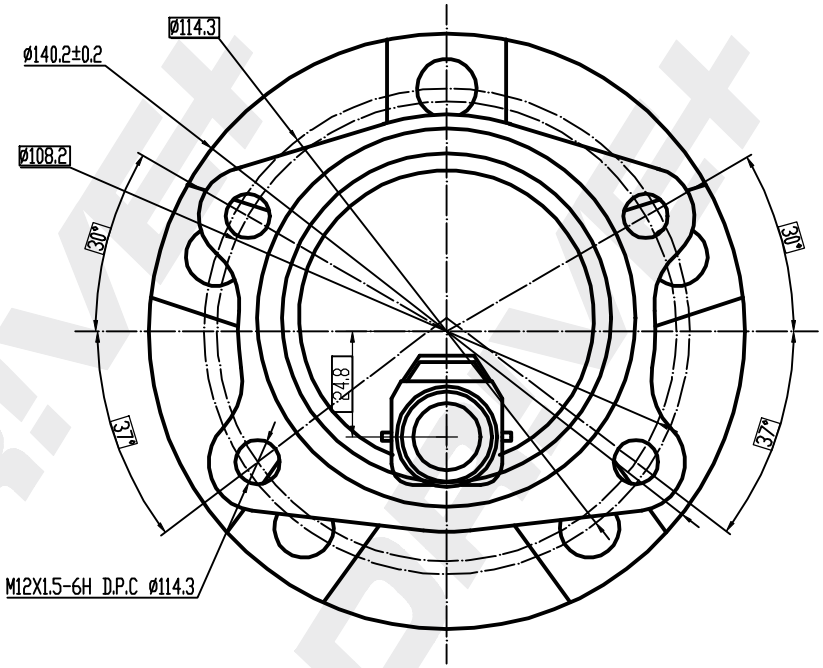

DP Number	Part Number	Drawing Version Number	Drawing Issue Date
DP2010.10.0564	DRW0564	V1	2025.06.24