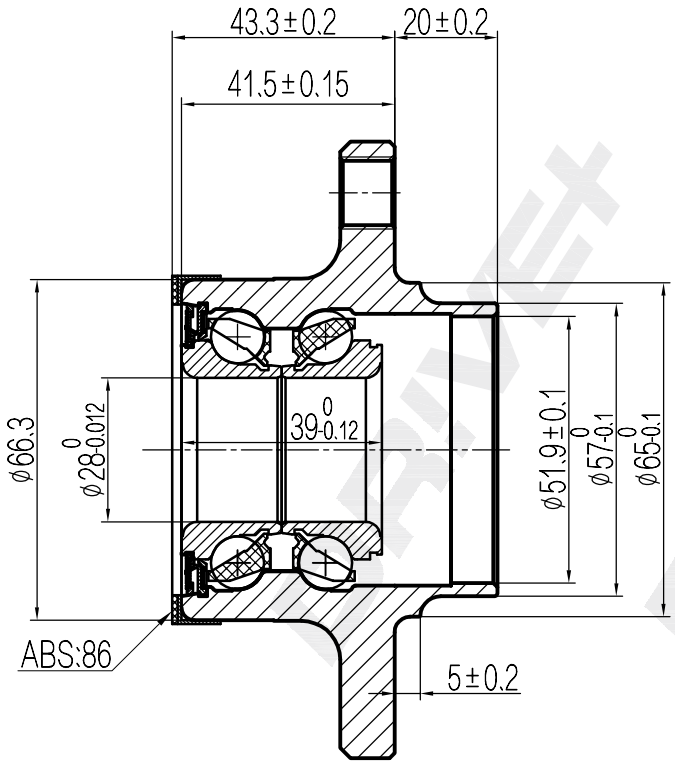

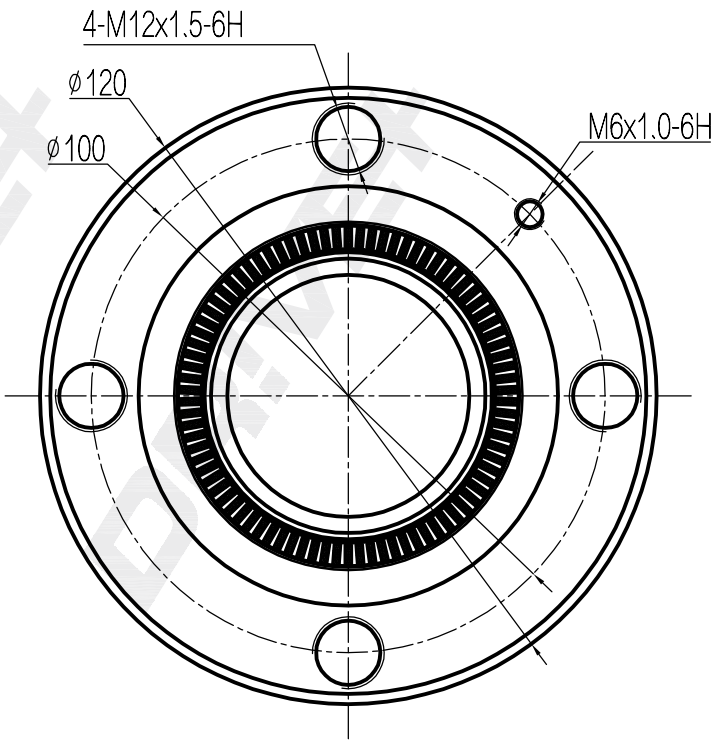

DP Number	Part Number	Drawing Version Number	Drawing Issue Date
DP2010.10.0765	DRW0765	V1	2025.04.19