Involute spline		
Outer Diameter	D	64.5±0.5
TEETH	Z	37
type surface		60°
Tooth slot radius	r	R0.8

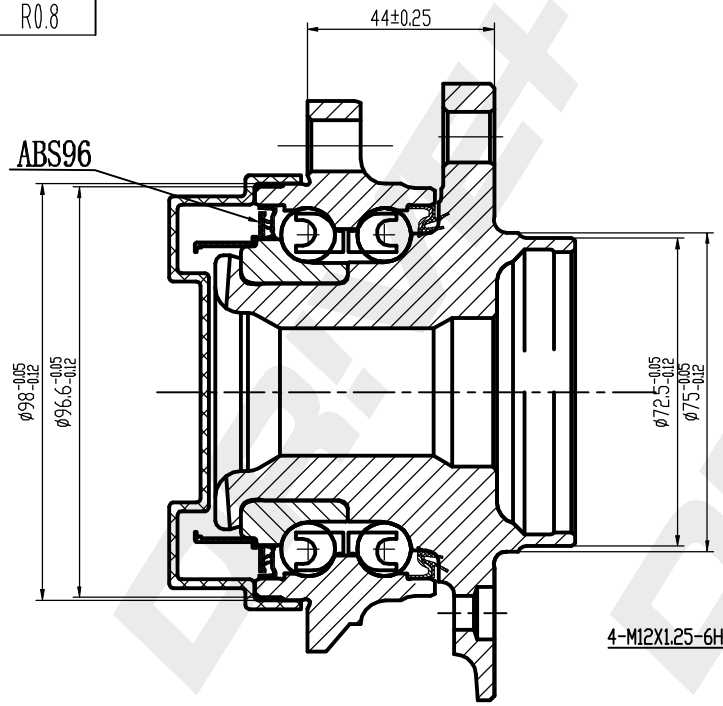

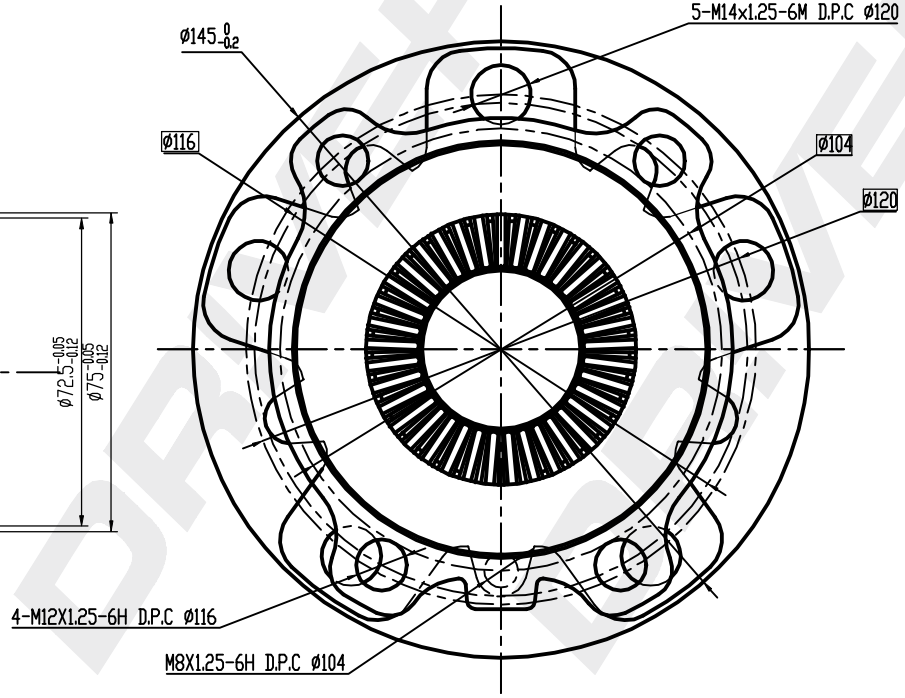

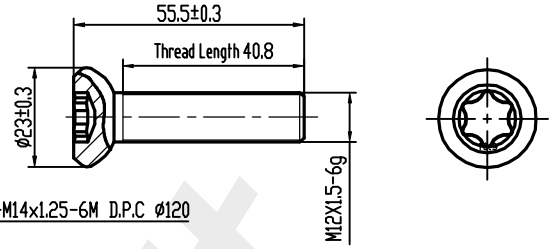

Bolt 4PCS Galvanized

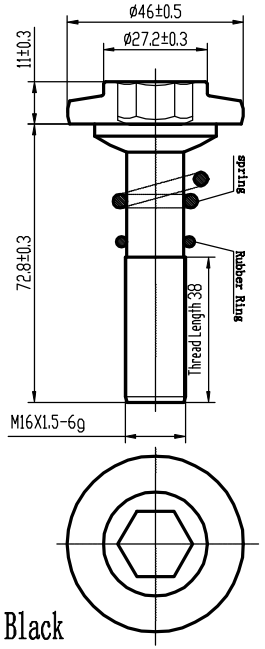

Bolt 1PCS Black

DP Number	Part Number	Drawing Version Number	Drawing Issue Date
DP2010.10.0763	DRW0763	V1	2025.06.24

DRIVE+