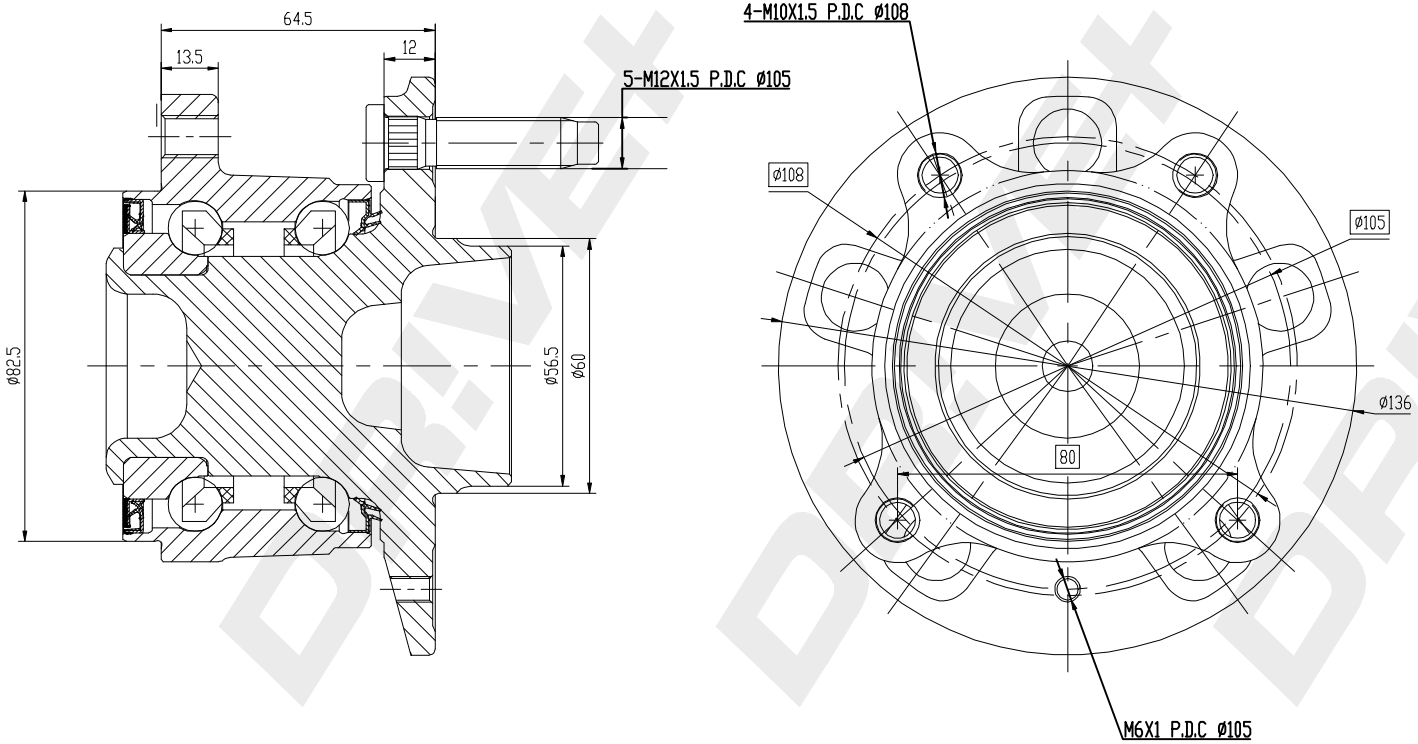

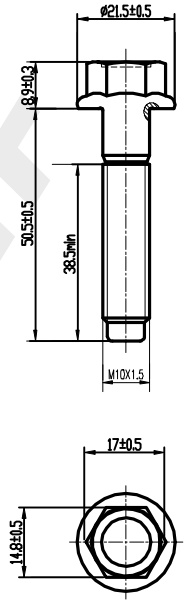

bolt 4PCS Galvanized

DP Number	Part Number	Drawing Version Number	Drawing Issue Date
DP2010.10.0773	DRW0773	V1	2025.07.16

DRIVE+