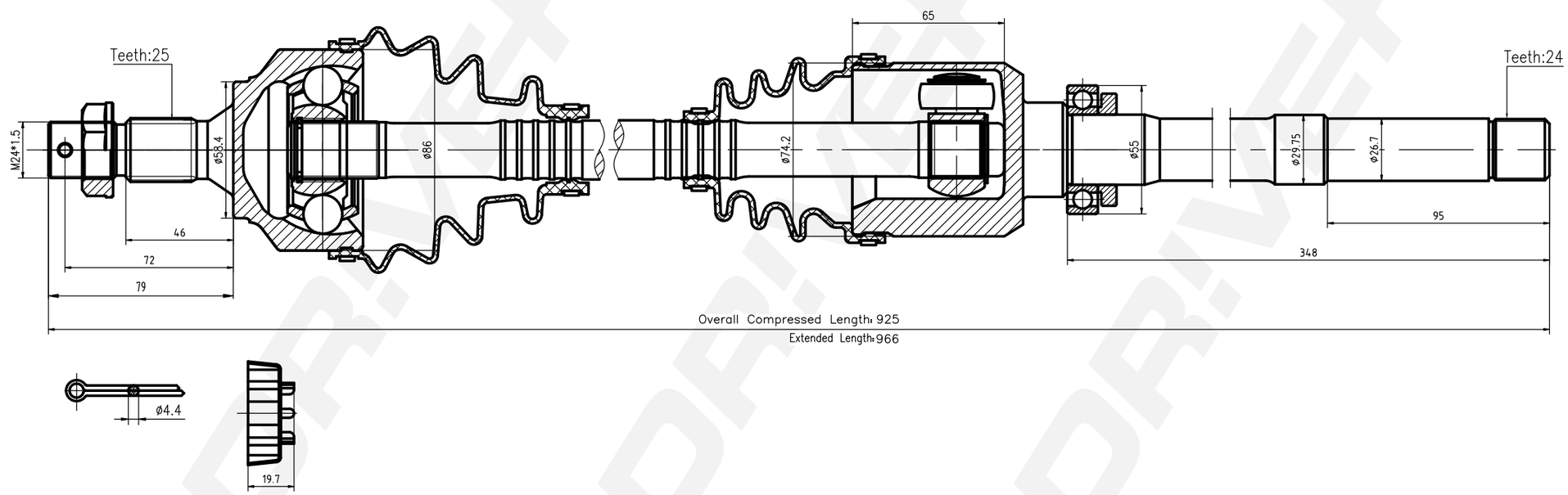

DP Number	Part Number	Drawing Version Number	Drawing Issue Date
DP2110.10.0606	DDS0606	V1	2025.04.01