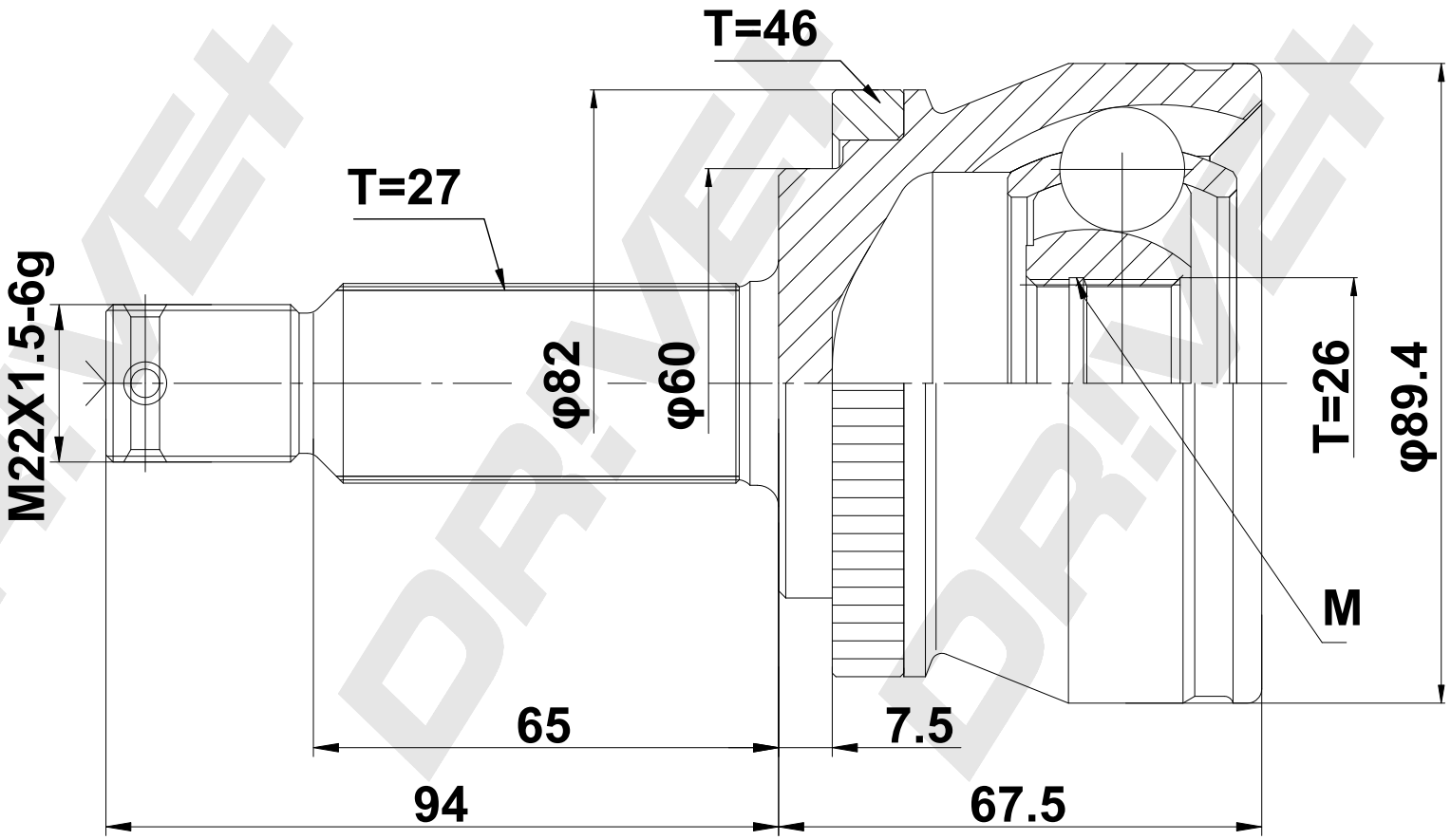

DP Number	Part Number	Drawing Version Number	Drawing Issue Date
DP2110.10.1271	DDC1271	V1	2025.04.11