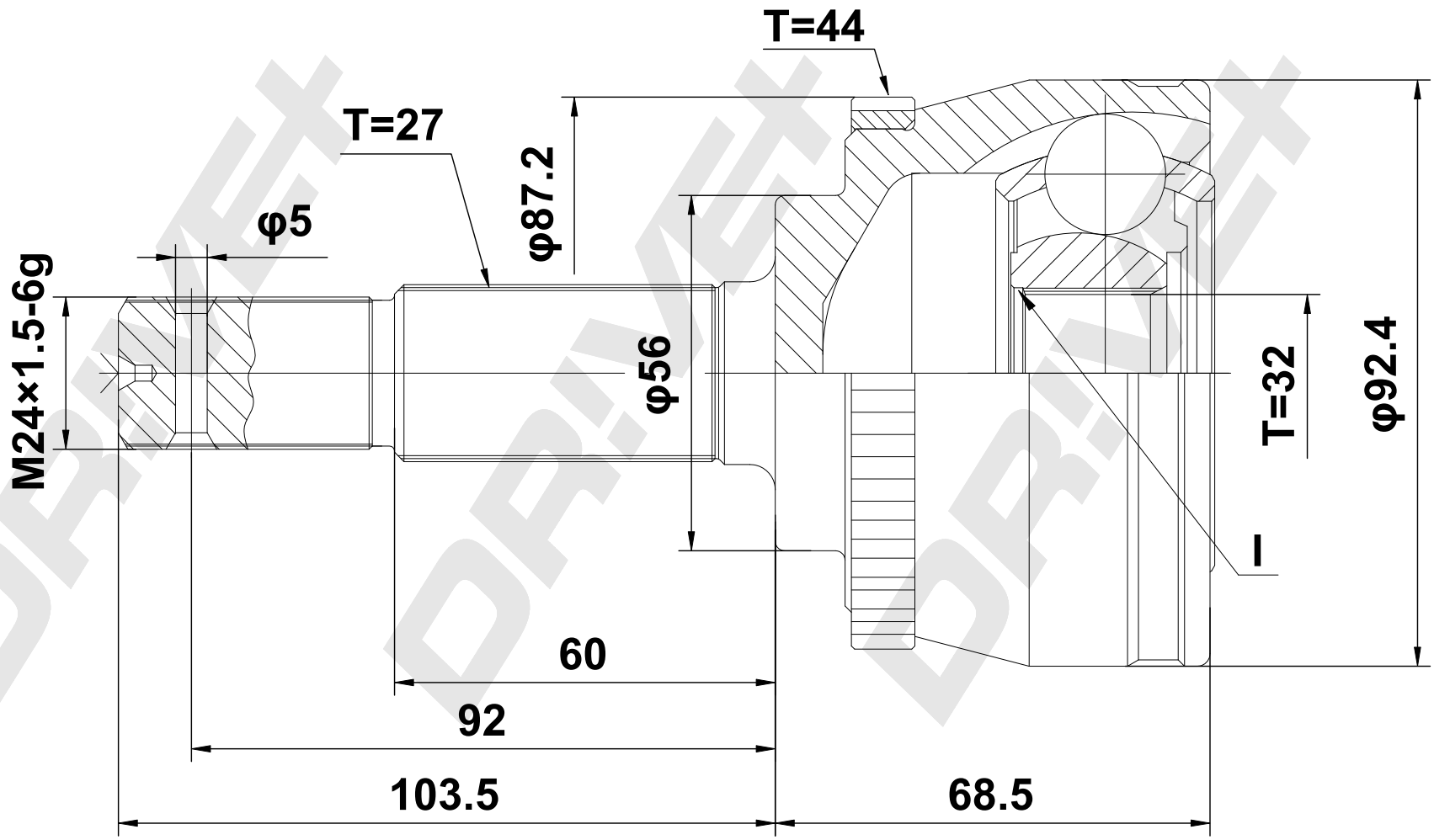


| DP Number | Part Number | Drawing Version Number | Drawing Issue Date |
|---|---|---|---|
| DP2110.10.1347 | DDC1347 | V1 | 2025.04.11 |