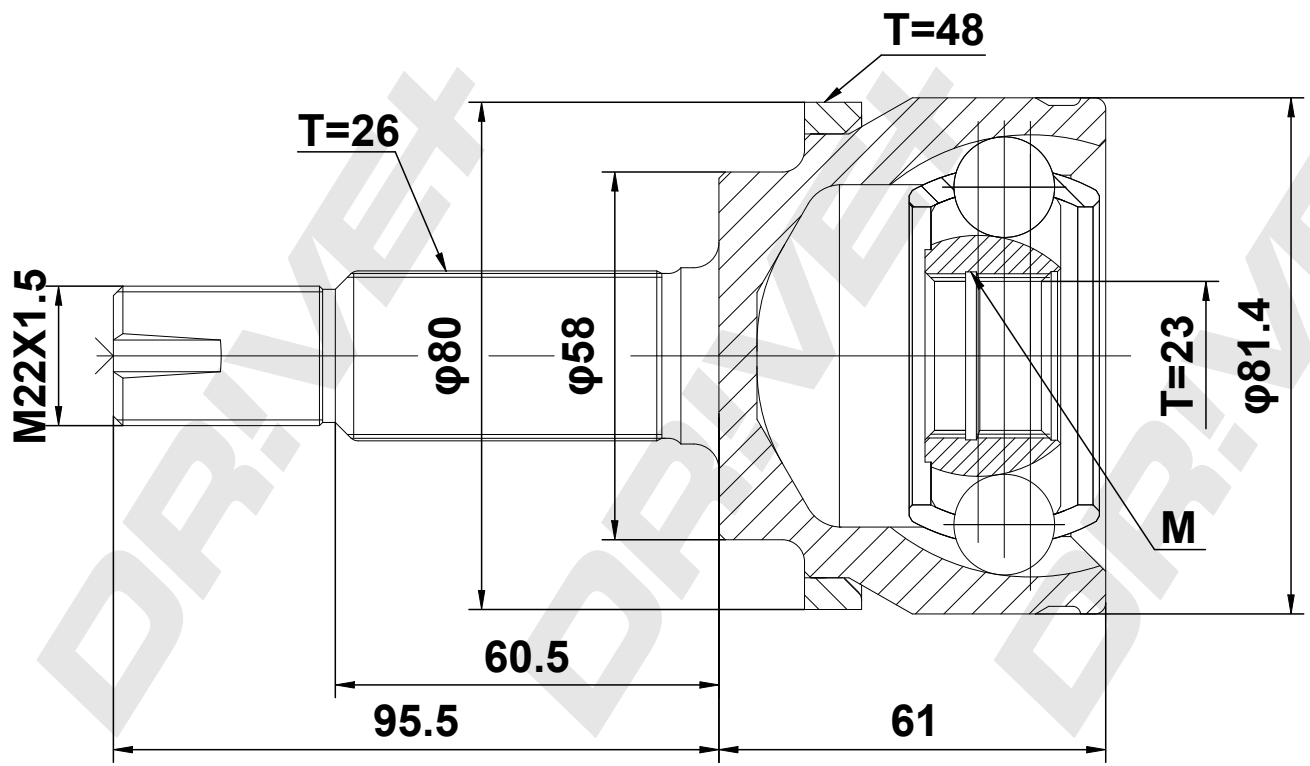

DP Number	Part Number	Drawing Version Number	Drawing Issue Date
DP2110.10.1486	DDC1486	V1	2025.11.10